CIRCOGRAPH® DS
Sensor system Ro 130

6.453

Operating Instructions

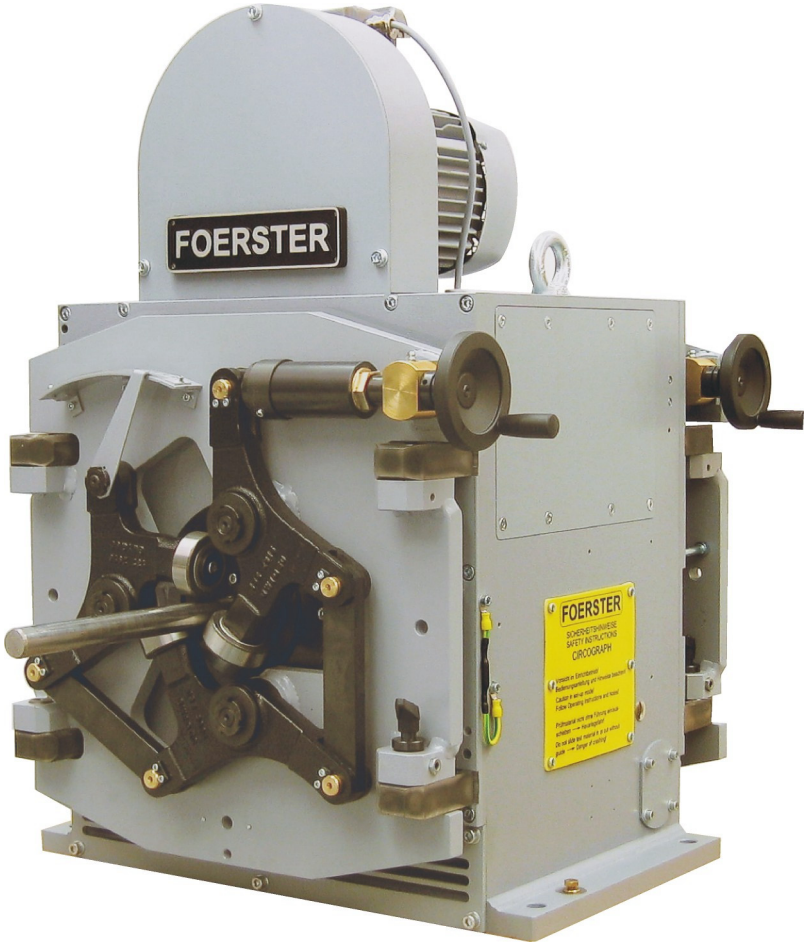

FOREWORD

These operating instructions were written to be read, understood and complied with in full by those persons responsible for operating the machine.

The complete operating instructions consist of the following sections:

1 Safety

2 Description

3 Installation

4 Operation

5 Maintenance

Machine faults can only be avoided and fault-free operation of the machine can only be guaranteed through knowledge of the operating instructions.

It is therefore particularly important that all responsible persons are familiar with and understand the full operating instructions.

Our service department or one of our representatives would be pleased to receive suggestions about how to further improve these operating instructions. Any questions not covered by these instructions will also be dealt with quickly and comprehensively.

Copyright

Notes:

1 SAFETY

1.1 Dangers posed by this machine

The sensor system features protective safety devices. It has been subjected to a safety test and safety acceptance test. In the event of operating errors or misuse, the machine may pose dangers and risks to

- the life and limb of the operator,
- the machine and other operator's valuables and
- efficient operation of the machine

All persons involved in installation, commissioning, operation, servicing and maintenance of the machine must

- be appropriately qualified and
- must strictly follow the information provided in these operating instructions.

Your safety is at stake!

1.2 Safety information and tips

The following symbols are used in these operating instructions:

DANGER!
This warns against dangers to persons. These sections provide you with information on what to do and what not to do in order to prevent personal injury.

WARNING!
These sections indicate possible damage to the test system. They provide information on what to do and what not to do in order to prevent damage to property.

NOTE!
These sections provide tips for the user on how to use the system better and also provide other useful information.

1.3 Use as intended

The sensor system is suitable only for non-destructive testing of **round material**.

Diameter range: refer to Technical Data
Smaller diameters and larger diameters may not be admitted into the sensor system under any circumstances.

Material with a cross-section which is anything other than round may not be admitted into the sensor system under any circumstances.

The sensor system may be operated only in conjunction with a suitable conveying mechanism and a lifting table.

On no account may you convert or modify the sensor system arbitrarily, for reasons relating to safety.

DANGER!
Masses rotating at high speed pose a serious danger to your life if the machine is operated incorrectly. Never touch the rotating sensor components.

NOTE!
The information on operation, servicing and maintenance prescribed in these operating instructions must be followed strictly.

1.4 Dangers posed by accessories

Transport mechanisms, lifting table and external control equipment must not render the protective safety devices of the sensor system inoperable.

1.5 Emissions

Refer to 2.4 Technical Data

1.6 Danger sources

The sensor system operates with a rotating test system and an attached roller guide system during operation. A person coming into contact with the roller guide or the rotating test system may suffer very serious injuries.

Switch off the drives before you put your hands into or touch the sensor system. Wait for all motions to cease!

Before carrying out servicing and cleaning work, switch off the drive for the sensor system and conveying mechanisms and disconnect the power supply (secure the master switch in position OFF).

Never remove protective safety devices or render them inoperable by making modifications to the system.

1.7 Workstations

The workstation is located on the electronic equipment cabinet or on the operating panel of the sensor system

Do not carry out any work or tamper in any other way with the sensor system when it is rotating.

1.8 Authorised operators

Only authorised personnel may work on the sensor system.
Please comply with the minimum legal age!

The operator is responsible for the safety of third parties in the work area.

The scopes of authority for the various activities on the sensor system must be clearly defined and complied with.

Untrained personnel pose a safety risk!

The operator must

- make the operating instructions available to the machine operator and
- make sure that the machine operator has read and understood them.

1.9 Personal safety equipment

You are to wear ear plugs, if the A-weighted equivalent sound pressure level at the workstations of the sensor system is greater than 85 dB(A). Sound pressure level for this equipment: refer to 2.4 Technical Data

1.10 Safety measures at the installation location

The sensor system must be installed stably on a machine foundation provided for it and must be firmly anchored to the foundation. If this is not done, this will pose a potentially lethal risk.

NOTE!
Ensure that the area surrounding the workstation is always clean and unobstructed by issuing appropriate in-company instructions and conducting inspections.

1.11 Protective safety devices

The CIRCOGRAPH sensor system is shut down

- when opening the housing (safety switch on the rotor cover)
- with the switch on the operating panel or on the electronic equipment cabinet
- with the EMERGENCY-STOP switch on the operating panel (EMERGENCY-STOP has to be linked with motor control)

The protective safety devices

- are installed to ensure the safety of the operating staff
- may not be modified, removed or bypassed by making modifications to the sensor system under any circumstances.

1.12 Behaviour in the event of an emergency

In an emergency, please immediately press the red EMERGENCY-STOP switch. Have authorised personnel remedy the cause of the fault immediately.

1.13 Declaration of conformity

We declare, that this product complies with the requirements of following European Directives and corresponding standards:

- European Directive 89/392/EEC: Safety of machines
- European Standards EN 12100, EN 60204

- European Directive 73/23/EEC: Safety of electrical apparatus
- European Standard EN 61010

- European Directive 89/336/EEC: Electromagnetic Compatibility
- European Standard EN 61326-1

February 23, 2005

INSTITUT DR. FOERSTER

Division TS - Test Systems

Dr. Jürgen Schröder

Notes:

2 DESCRIPTION

2.1 Application

Non-destructive testing of ferromagnetic, austenitic and non-ferromagnetic round materials (wires, bars, and tubes) for surface flaws in conjunction with the CIRCOGRAPH® DS testing and evaluation electronic equipment and a suitable mechanical handling system.

- Diameter range of testing material 10 to 130 mm
- Preferably piece testing
- Surface free of scale, wherever possible bright
- Testing without physical contact at rotational speeds up to 3,000 rpm
- End condition free of projecting burrs
- Max. test material temperature +80 °C
- Test heads with tracking width 2x2.5 – 2x5 – 2x10 mm [BS]

Testing capacity

- surface flaw testing, preferably longitudinal flaws
- flaw detectability for bright material surface from flaw depth of approx. 50 µm
- testing speed of up to 2 m/s for gapless testing (rotational speed = 3,000 rpm and two test heads with 2x10 mm track width)

2.2 Mode of operation

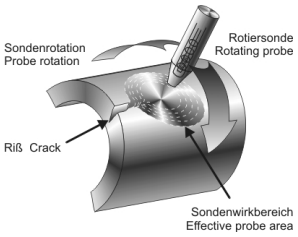

Signal generation during rotary testing

The sensor system operates on the basis of the eddy current principle in accordance with EN 12084. Rotating systems are used to detect longitudinal surface defects. Probes rotate at high speed and without physical contact around the test piece. By feeding the material the probes scan the surface in helical paths.

Due to the locally high resolution of the probes and the transverse movement across the crack by each revolution, this is the most sensitive method for detecting longitudinal defects.

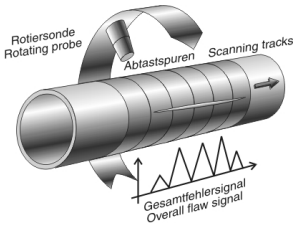

Test tracks and flaw signals of a rotating probe

Any time a probe crosses a crack , it generates a signal. Thus, the rotating system generates a high number of consecutive signals that reliably indicate a flaw of a certain length.

The testing speed is a result of the number of rotating probes, integrated in the Ro 130, the track width of all probes, and the rotating speed (rpm). The helical path of all probes must be side by side to guarantee a fully gapless scan.

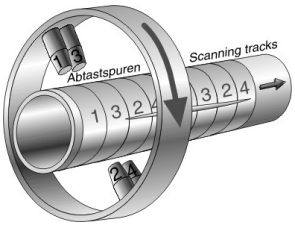

Test tracks of two test heads with 2 probes each offset by 180°

The signals recorded by the probes are transferred from the sensor system to the test electronics for evaluation.

The primary power supply and the secondary signal of the probes are transmitted by rotating inductive transmitters without physical contact.

2.3 Construction

Fig. 2.1 Test equipment configuration,
top: CIRCOGRAPH DS / MOC SB, bottom: Rotating head Ro 130 entry and exit side

CIRCOGRAPH DS test electronics and the connection cables are required for a complete test system, besides the sensor system which scans the test material and generates the eddy-current signal.

A separate leaflet:

“CIRCOGRAPH DS System 6.430”, Order-No. 163 852 1
will inform you about the according test electronics.

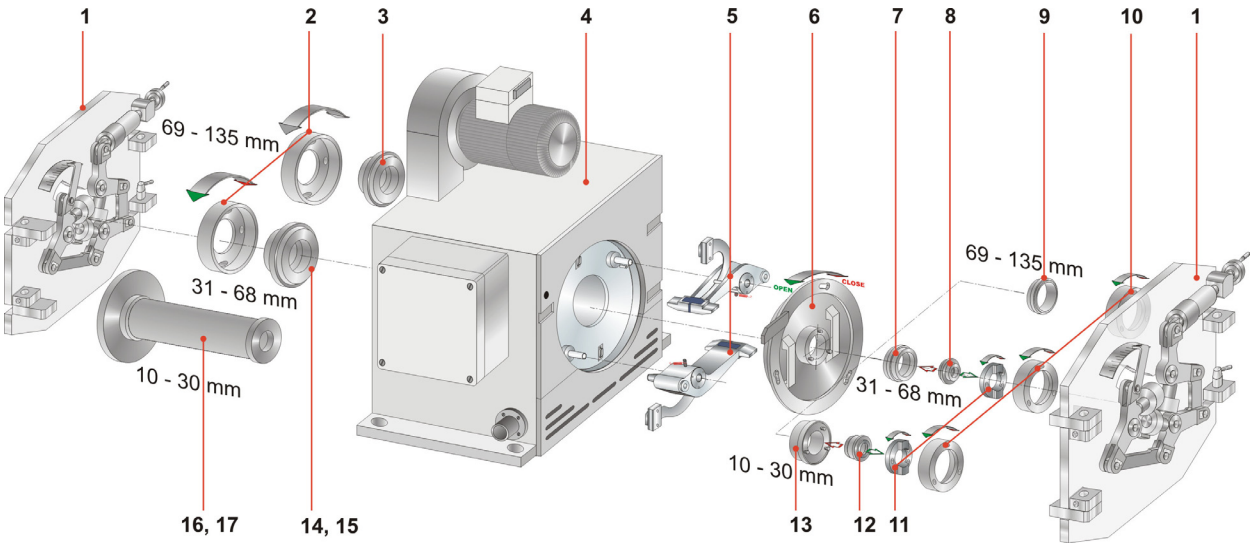

Fig. 2.2 CIRCOGRAPH Sensor system Ro 130, main view, legend see Chap. 2.7

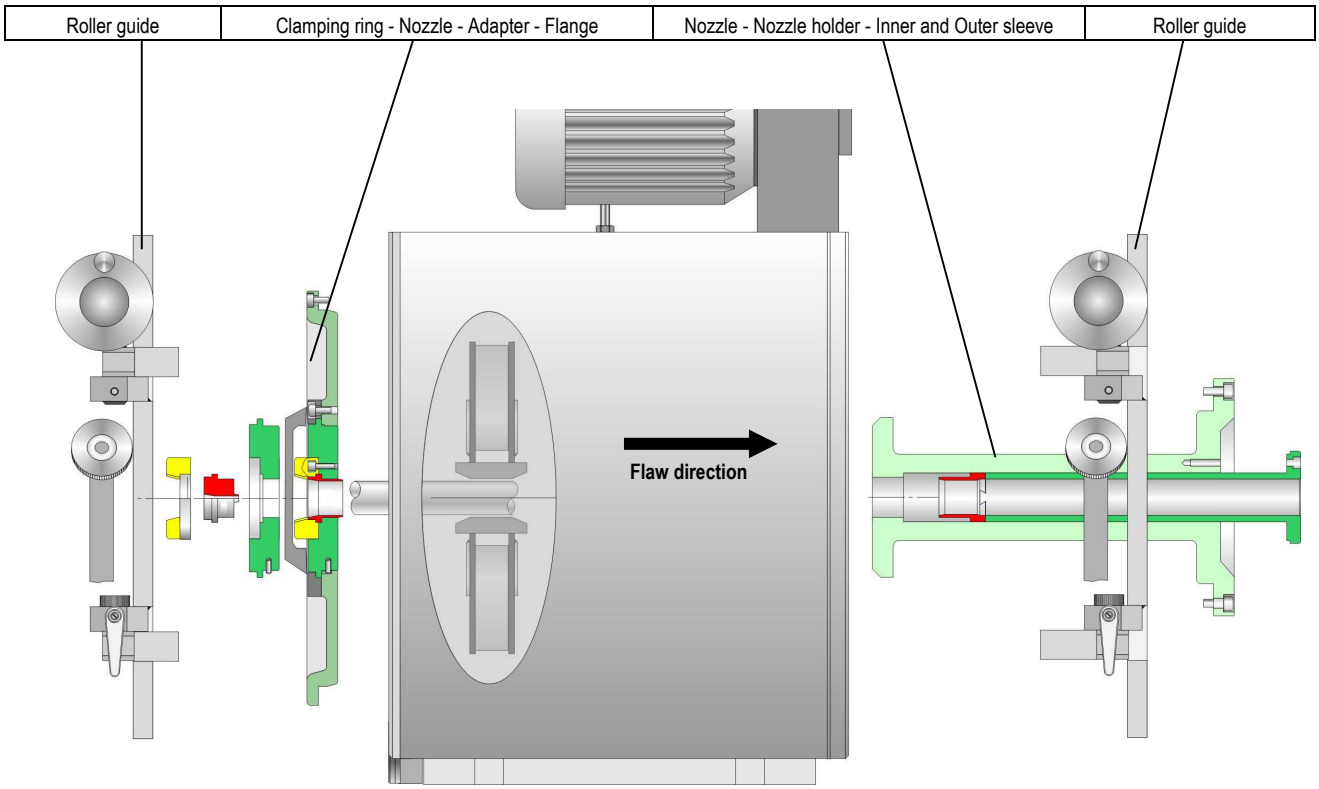

Fig. 2.3 CIRCOGRAPH Sensor system Ro 130, basic components

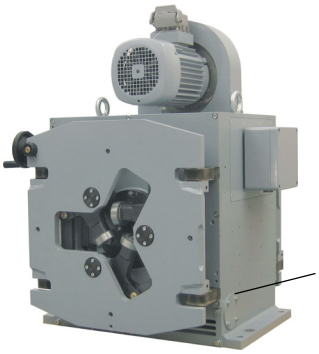

In order to withstand the rough conditions of use, the Ro 130 has been designed to be dust-protected, robust and reliable by means of complex constructional measures such as labyrinth seals and dirt deflectors.

The chamber surrounding the test zone serves the purpose of contact and burst protection as well as dust collection. This chamber is provided to connect an external extraction system (to be provided by customer).

The Ro 130 sensor system consists of the following compulsory components:

- rotating head Ro 130
- test heads
- protective nozzles

The following options are available for adaptation to particular material conditions:

- Centric triple roller guides
- Nozzle holder and Protective Nozzles with connector for compressed air (to keep the testing zone free of dust)

2.3.1 Test Heads

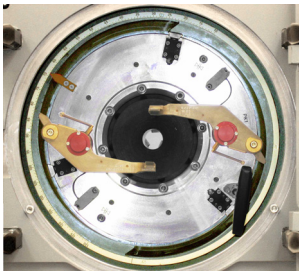

Rotating disc with test heads

The test heads are both the heart of the sensor system and its most critical components.

They consist of an eddy-current probe with field, measuring and clearance windings which are installed in a precise mechanical holder and are connected by means of a highly flexible special cable with a connection plug.

As already mentioned in the ‘Mode of operation’ section, there is a mathematical relationship between the number and track width of the test heads, the rotational speed and the testing speed.

The following table shows these relationships and gives typical examples for a practical selection:

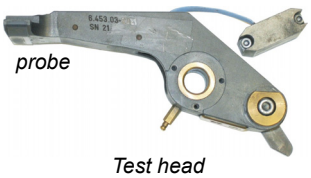

Maximum testing speed	Test head type			Decreasing sensitivity to short flaws
n = 1,500 rpm / n = 3,000 rpm	Number / Track width TH / BS	Bright material Fe - Nfe - Aust	rough rolled Fe	
0.25 m/s / 0.5 m/s	2 TH / 2 x 2.5 mm	6.453.01-2311	6.453.03-2311	↓
0.5 m/s / 1.0 m/s	2 TH / 2 x 5.0 mm	6.453.01-2321	6.453.03-2321	
1.0 m/s / 2.0 m/s	2 TH / 2 x 10 mm	6.453.01-2331	6.453.03-2331	

Tab. 2.1 Test head selection

2.3.2 Rotating Head Ro 130

The rotating head is the main component of the sensor system.
It consists of:

- rotor
- transmitter
- drive
- housing
- rotating head electronics

The operator front is to be selected as right or left in the order!

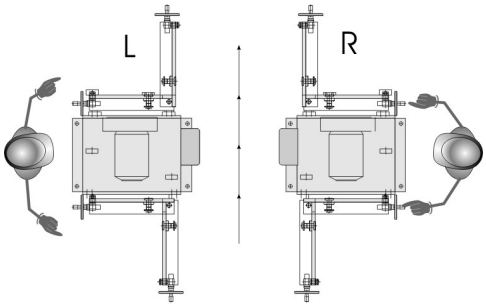

Fig. 2.4 CIRCOGRAPH sensor system Ro 130, operator front left (L) or right (R)

Rotor

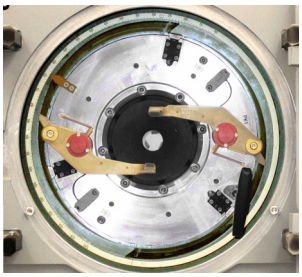

Rotating disc with test heads in testing position

The rotor consists of a hollow shaft, a rotor disc and the movable part of the transmitter.

The rotor is driven by the motor by means of a high-power profile flat belt. It is supported in the housing by two high-speed bearings.

The high-precision rotating disc for holding the test heads is fitted on the front side.

A pivot-mounted spiral disc with an actuating gear and automatic blocking facility is fitted in the rotating disc for precise and simultaneous test head diameter adjustment.

DANGER!
Never run the rotating head without test heads!
Always use test heads in pairs with the spring in the same position!

Transmitter

Wear-resistant rotating transmitter in disc-type construction with two field transmitter, four measuring channels and a clearance channel.

Consisting of a rotor and stator, it transmits the field current for the rotating probes from the stator to the rotor and, in the opposite direction, transmits the test signal to the test electronics for evaluation.

Rotating head electronics

The rotating head electronics amplifies the probe signals and the field current. It is installed in a robust box on the connection side of the bearing housing to permit ease of maintenance. The cable to the test electronics is connected using MIL plug connectors.

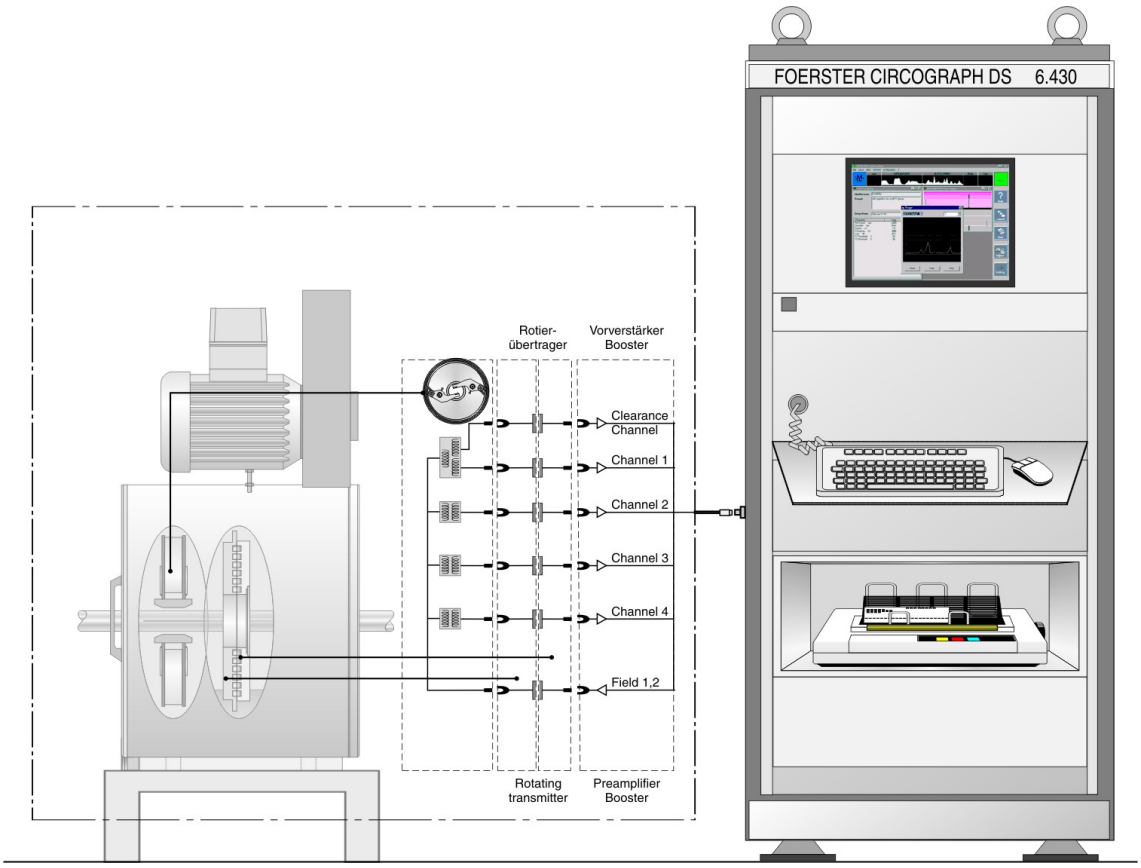

Fig. 2.5 Signal path

Drive

Indestructible 3-phase drive with a cage motor in conformance with standards.

External motor control for power supply to the drive.

- MOC SB motor control
  - rotational speed switchable 1,500 or 3,000 rpm, with electrical breaking
  - minimized bearing wear through adaptation of rotational speed to testing speed
  - for applications with changing testing speeds

The motor control supply the required voltages and currents and contain the necessary switching and safety devices (contactors, motor protection switches, protective circuits).

The drive motor is connected directly using a Harting plug connector.

Diameter adjustment

Diameter adjustment is carried out manually with a socket spanner. The linear scale is located on the rotor. The scale division of 0.5 mm guarantees an accurate diameter setting.

Protective nozzles

The protective nozzles have a dual function:

They protect the test heads from damage, particularly during entry and exit of the test material, provided that the straightness conditions and the end properties are observed.

Protective nozzles are available in nominal sizes of 10.0 to 135 mm. They **limit the maximum eccentricity** of the test material within the zone to be tested to a narrow dimension within which the clearance compensation can fully compensate the sensitivity fluctuations.

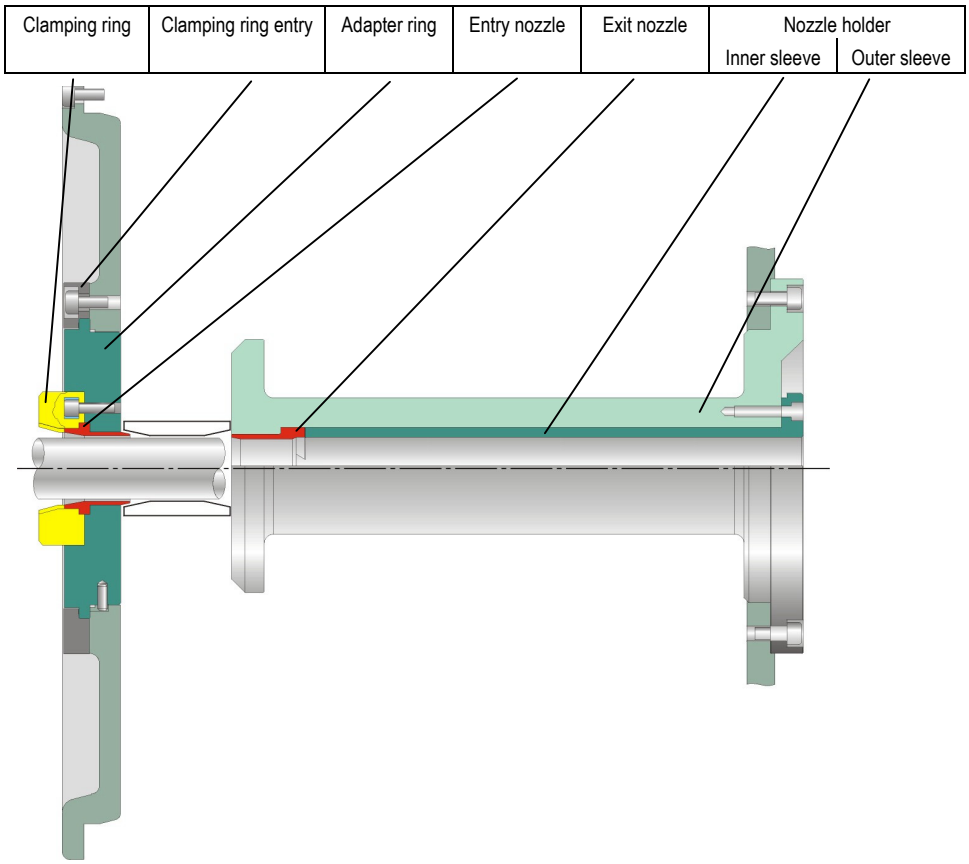

Fig. 2.6 Protective nozzles, main picture NM 10 - 30, exchangeable nozzle with nozzle holder or nozzle adapter

Entry and exit nozzles must always be used in pairs with the same nominal value.

Protective nozzles can be ordered from INSTITUT DR. FOERSTER or can be manufactured by the customer on the basis of drawings.

WARNING!
Operation without protective nozzles is not permitted for damage and safety reasons.

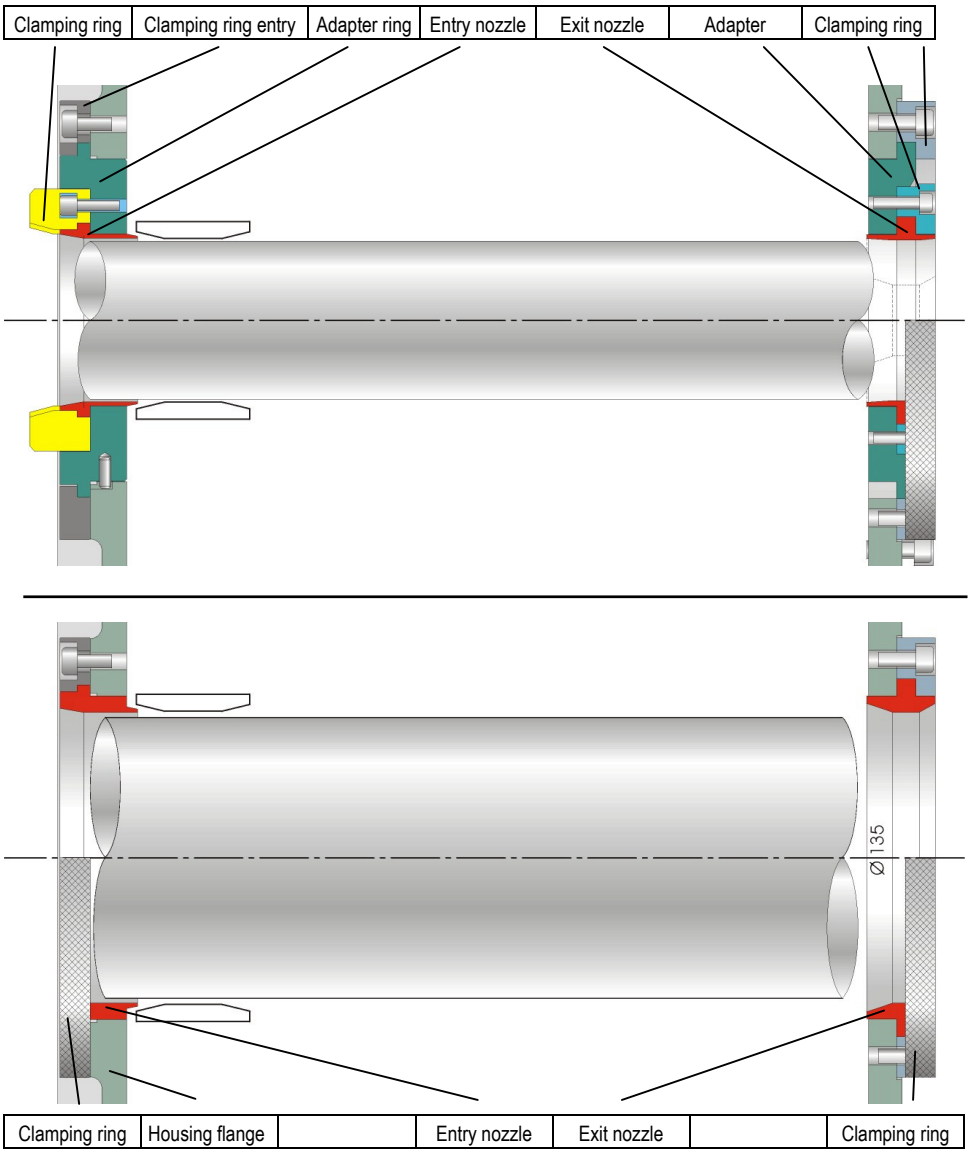

Fig. 2.7 Top: Protective nozzles, main picture Ø 31 – 68, exchangeable nozzle with adapter
Bottom: Protective nozzles, main picture Ø 69 – 135, exchangeable nozzle

Roller guide

The centric roller guides have two advantages:

The centric triple roller guides have two advantages:
In set-up mode, a calibration piece with reference flaws can be held centrically outside the test line and the test electronics can be adjusted simply, since the rotating probes periodically scan the test flaw and display the signal quasi-statically.
For setting of clearance compensation there is no need to hold the calibration piece centrically.

In testing mode, the roller guides improve centricity, especially for smaller dimensions, and damp vibrations. They are always required if the drivers for material transport cannot be set up directly in front of and behind the sensor system.

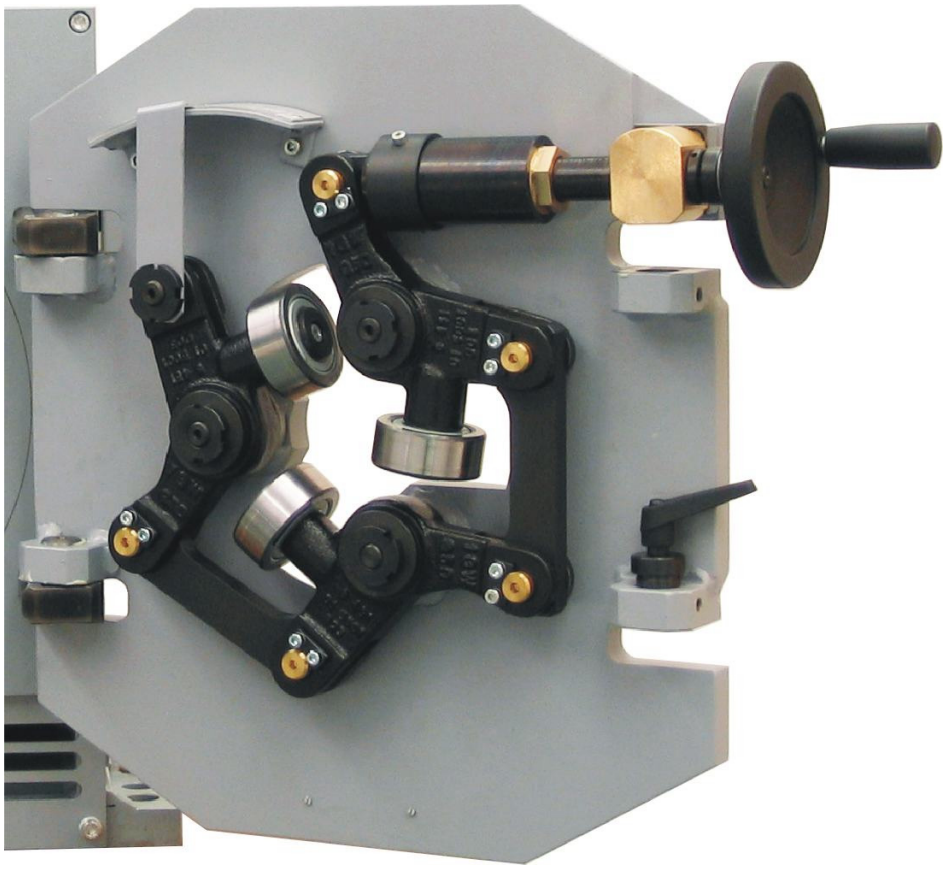

Fig. 2.8 Roller guide

2.4 Technical Data

Diameter range test material	continuously adjustable 10 to 130 mm
Revolution speed MOC SB motor control	1,500 or 3,000 rpm **S**witchable with **B**rake
Deceleration times from without braking with braking	3,000 rpm approx. 360 sec approx. 40 sec
Type of test	preferable without physical contact
Test heads (TH) two probes each	two TH offset by 180°, adjustable according to a scale
Probe track width of TH	2x2.5 mm, 2x5 mm and 2x10 mm
Test speed for gapless testing (2x5 mm track width)	v_{max} _ for 2 TH rpm = 1,500 0.5 m/s rpm = 3,000 1.0 m/s
Dimensions	see dimension drawing
Mass	approximately 370 kg
Drive Three-phase motor	n_o = 1,420 rpm P = 2 kW n_o = 2,830 rpm P = 2.5 kW
Power supply	Rotary current 3x400 V (adaptable via isolating transformer)
Useful bearing life (depending on operating conditions)	operating hours typically 1,500 rpm approx. 7,000 h 3,000 rpm approx. 5,000 h
centric roller guide (option)	Ø 10 to 135 mm
Weight	approx. 90 kg
Dimensions	see dimension drawing
Emissions	The A-weighted equivalent sound pressure level at the workstations of the sensor system lies at 62 dB(A) for rotating speed up to 1,500 rpm and increases up to 81 dB(A) for maximum rotating speed 3,000 rpm.

2.5 Dimension sheet

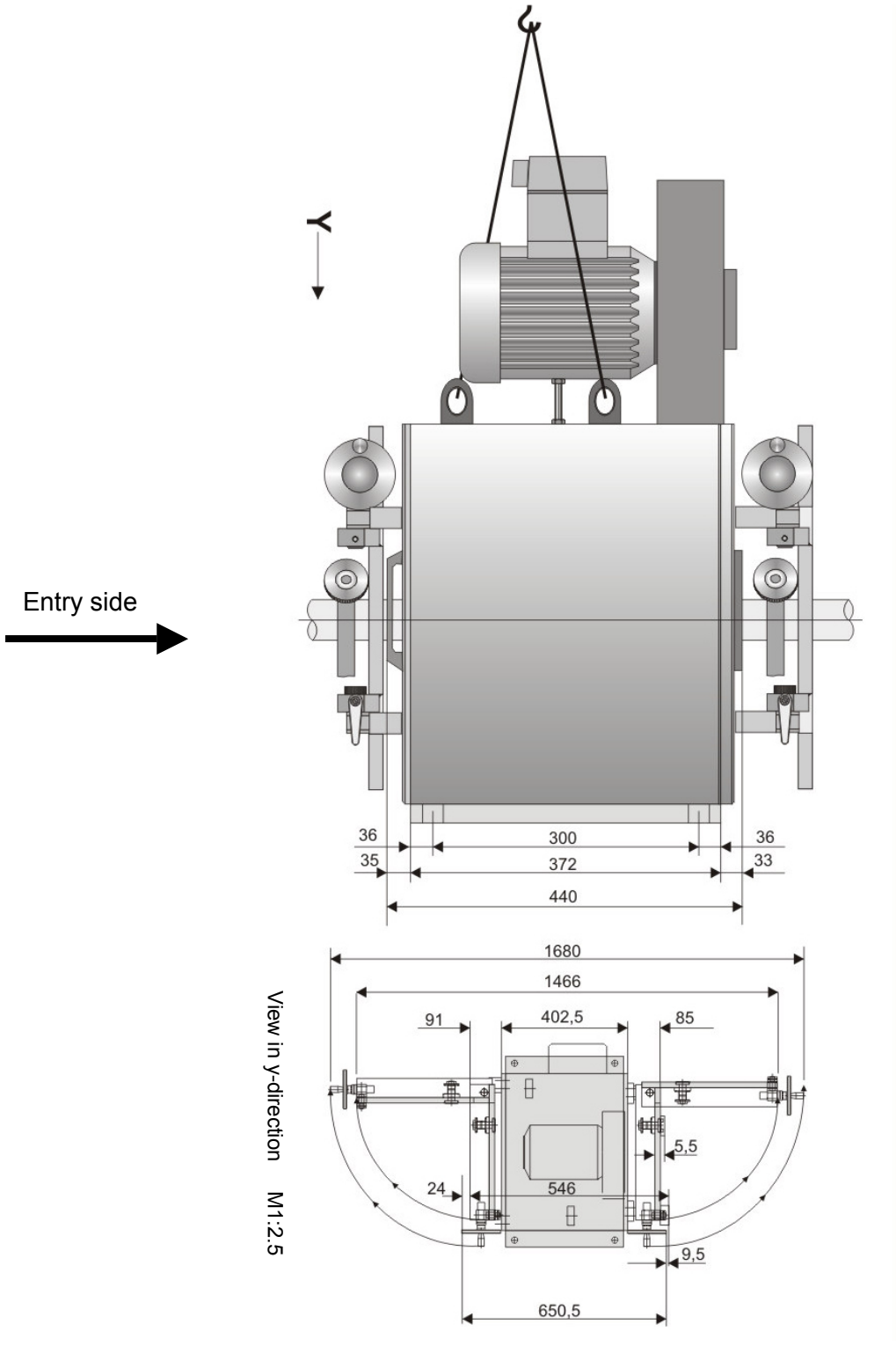

Fig. 2.9 Dimension sheet 1

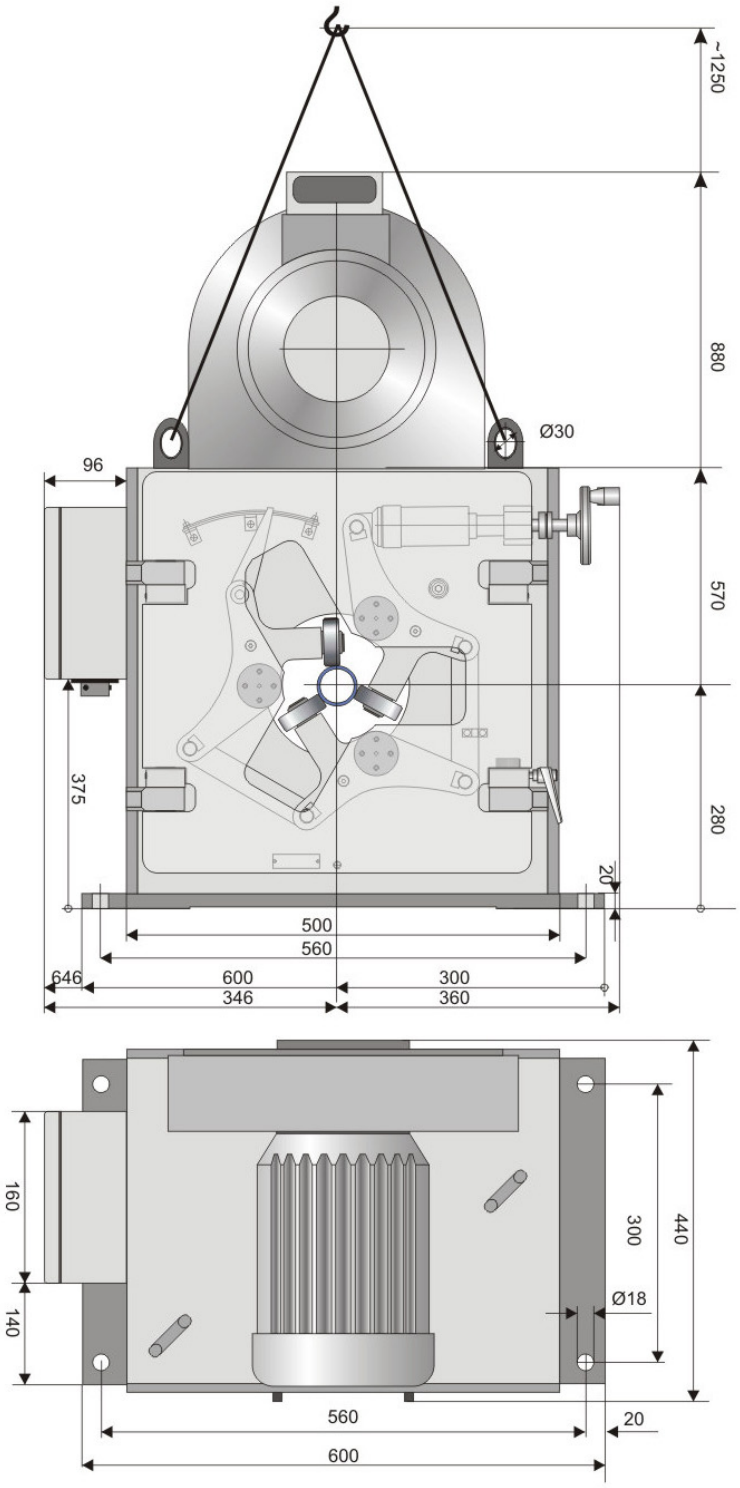

Fig. 2.10 Dimension sheet 2

2.6 Operating, storage and transport conditions

Operation

Temperature range	
test head	+5° C to +80° C
rotating system	+5° C to +45° C
Relative humidity	
test head	95 %, casually condensation permissible
rotating system	85 %, condensation not permissible
Degree of protection	EN (60 529)
test head	IP 65
rotating system	IP 43

Storage and transport

Storage, transport and handling may be carried out in original packaging only. The packages must be protected from moisture.

Observe instructions on the packaging (e.g. fragile, store in a dry place, this way up, etc.)

Storage conditions

- storage in unopened original packaging
- in closed rooms
- temperature range -20° C to +70° C
- max. relative humidity 95 %, condensation not permissible

2.7 Standard Components

Legend No	Part name	Part-No	Order-No.
4	Rotating head Ro 130	6.453.01-1301	**1656686**
	Testing cable DS 10M, CIRCOGRAPH-DS	6.460.01-9921	**1650785**
	Motor cable 10M	6.460.01-9931	**1638343**
	Grounding cable 10M	6.460.01-9911	**1588818**
5	Test head N, BS = 2 x 2.5	6.453.01.2311	**1480766**
	Test head N, BS = 2 x 5	6.453.01-2321	**1481690**
	Test head N, BS = 2 x 10	6.453.01-2331	**1480782**
	Test head, BS = 2 x 2.5	6.453.03.2311	**1807390**
	Test head, BS = 2 x 5	6.453.03-2321	**1664549**
	Test head, BS = 2 x 10	6.453.03-2331	**1807641**
12*	Nozzle, entry, 10 - 30		
	Nozzle adapter 30 entry, consisting of:	6.453.01-1001-55	**1276018**
13	Adapter ring	6.453.01-1001-5501	**1276956**
11.2	Clamping ring	6.452.01-1001-5502	**1253174**
17*	Nozzle, exit, 10 - 30		
16	Nozzle adapter entry, consisting of:	6.453.01-1001-50	**1275976**
16.1	Inner sleeve	6.451.01-1001-5002	**1243560**
16.2	Outer sleeve	6.453.01-1001-5001	**1277642**
8*	Nozzle, entry, 31 - 68		
	Nozzle adapter 65 entry	6.453.01-1001-57	**1276026**
7	Adapter ring	6.453.01-1001-5701	**1276859**
11.1	Clamping ring	6.453.01-1001-5702	**1276867**
15*	Nozzle, exit, 31 - 68		
14	Nozzle adapter 65 exit, consisting of:	6.453.01-1001-52	**1275984**
14.1	Adapter ring	6.453.01-1001-5201	**1277502**
14.2	Clamping ring	6.453.01-1001-5202	**1277510**
9*	Nozzle, entry 69 - 135		
10	Clamping ring entry	6.453.01-1001-0003	**1276050**
3*	Nozzle, exit, 69 - 135		
2	Clamping ring exit	6.453.01-1001-0004	**1276069**
1	Roller guide Ro 130	6.453.01-5001	**1300610**
	Set of tools Ro 130	6.453.01-9211	**1291114**
	Motor control, MOC SB	6.430.01-3040	**1638289**
	Operating instructions, SENSORSYSTEM Ro 130	6.453 UA06/DE	**1826875**
	Operating instructions English, SENSORSYSTEM Ro 130	6.453 UA06/EN	**1826883**
6	Housing flange	6.453.01-1001-0001	**1276034**
* 8, 9, 12	Nozzle entry, Nominal diameter to be mentioned on ordering	6.453.01-3211	**1377345**
* 3, 15, 17	Nozzle exit, Nominal diameter to be mentioned on ordering	6.453.01-3221	**1377353**

Notes:

3 INSTALLATION

3.1 Setup and Connection

NOTE!
The sensor system must be mounted on a horizontally shiftable lifting table in order to be able to change the dimensions or to carry out service work outside of the test line.

Requirements of the lifting table:

- It must be designed accordingly for the weight and function of the sensor system
  - adequate load-bearing capacity
  - low-vibration design
  - able to be fixed in test position
- With precise vertical adjustment facility
- Able to be withdrawn from the testing position to maintenance position and able to be removed reproducibly back; withdrawing travel at least 800 mm
- The mounting surface for the sensor system must be completely horizontal at every elevation (this must be checked with a precision level)
- Cable skid for protecting the cables against damage when traversing the lifting table

The two horizontal end positions of the lifting table (maintenance position/test position) should each be monitored with a limit switch. The limit switches must be gated with the roller conveyor control system in such a way that the roller conveyor can be switched on only if the table is fixed on one of the end positions. In addition, it must be ensured that the table can be moved out and in or vertically adjusted only if the roller conveyor is switched off and no testing material inside.

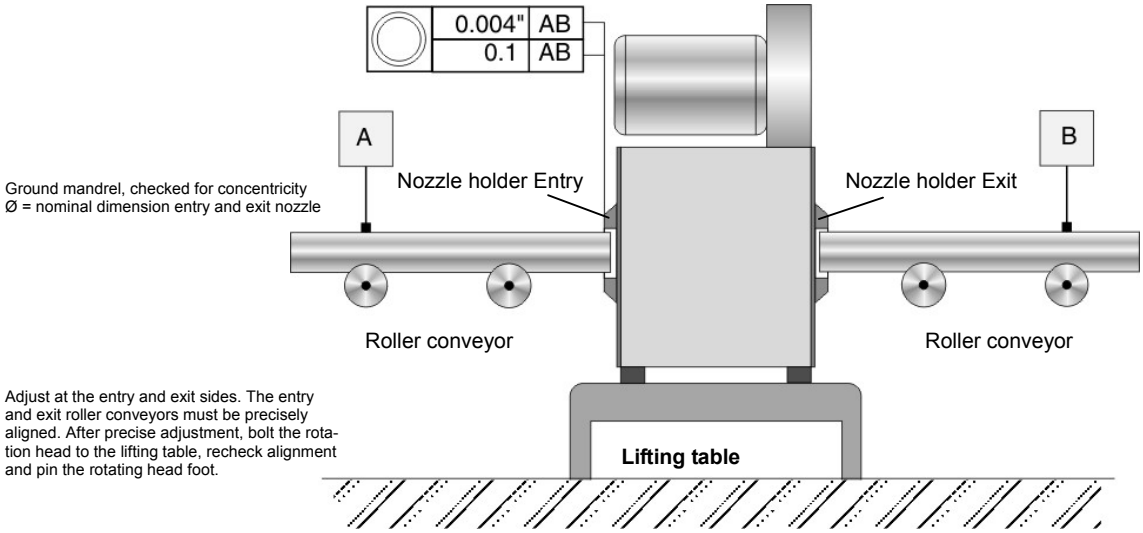

Fig. 3.1 Aligning the sensor system on the lifting table

Electrical connections

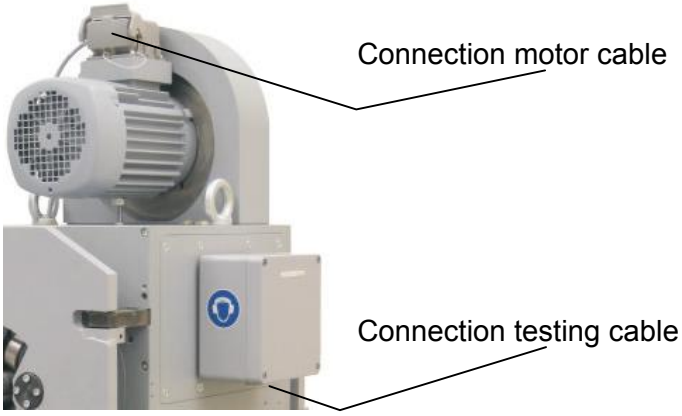

Fig. 3.2 Rotating head, connections

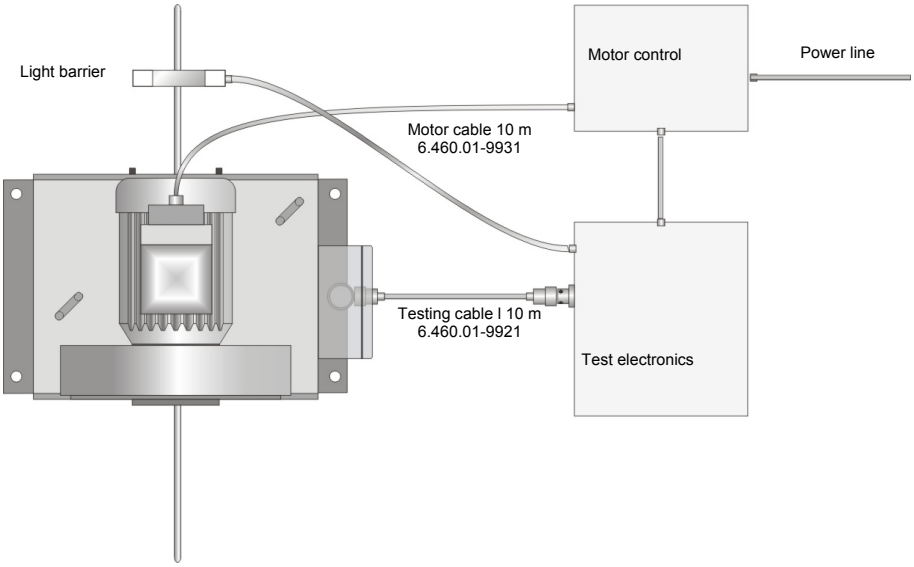

Fig. 3.3 Connection 4-channel rotating head to CIRCOGRAPH DS

NOTE!
Protective conductor connection (PE) according to
EN 61010 (VDE 0411)
Connect the protective conductor terminal of the electronic cabinet and the other system components, e. g. control cabinets, motor control, rotating heads with the next main protective conductor terminal 16 mm^2.
A green/yellow lead with 16 mm^2 Cu is to be used for that.

4 OPERATION

4.1 Dimension change

The following steps must be carried out during conversion

I Set test head to new nominal value of testing material

II Insert suitable protective nozzles

III Set roller guides to test diameter

IV Center sensor system in the test line

Preparation

- Select protective nozzles for new test piece measurement
- Prepare tools for dimension change

WARNING!
Do not intervene manually in the sensor system when the rotating unit is running:
Danger of injury!
Switch off drive before carrying out any work!
Wait for machine standstill!
Deceleration times from max. rotational speed 3,000 rpm:
approx. 360 seconds without braking, with braking 40 seconds

Dimension change procedure

- switch off sensor system drive
- move sensor system out of the test line
- open both roller guides
- remove entry and exit nozzle
- clean nozzle mount carefully
- adjust test heads to the new nominal diameter of the protective nozzles
- install nozzles
- check setting (observe smooth running of rotor)
- move rotating head into test line
- insert test material

4.2 Selection and installation of the protective nozzles

4.2.1 Selection of the protective nozzles

Function of the protective nozzles

- guarantee protection from damage during entry, even for test pieces with larger diameters, impermissible curvatures or deformed fronts or ends
- in addition during operation without roller guides: guide the test material with low eccentricity

Recommendations to figure the nozzle diameter for obtaining good test results are given on the basis of empirical values, depending upon test material diameter:

Test results			
Test material Diameter D mm	Protective Nozzles DD [mm]		
	optimal	normal	limited
10.0 – 14.0	D + 0.3	D + 0.5	D + 1.0
> 14.0 – 30.0	D + 0.5	D + 1.0	D + 1.5
> 30.0 – 65.0	D + 0.7	D + 1.5	D + 2.0

Tab. 4.1 Standard protective nozzle

The protective nozzles can be selected more precisely depending on the test diameter if the quality of guidance is sufficiently precise. This can improve the test results

Test heads with highest local flaw resolution, should be used with adapted protective nozzles

Test heads with standard flaw resolution to be used with drawing bench or with increased curvature of test piece

		BS
6.453.01-2311	6.453.03-2311	2 x 2.5 mm
6.453.01-2321	6.453.03-2321	2 x 5.0 mm
6.453.01-2331	6.453.03-2331	2 x 10 mm

* BS = track width

Note! The procedure for selecting nozzles and for scale setting has changed.

4.2.2 Required tools

Usage	Tool	Order-No.
Nozzle exchange and diameter setting	■ Hexagon screwdriver, warped a/f -2.5 mm (extend.)	**012 558 0**
	■ Hexagon screwdriver, warped a/f -3 mm (extend.)	**012 559 8**
	■ Hexagon screwdriver, warped a/f -4 mm (extend.)	**012 560 1**
	■ Hexagon screwdriver, warped a/f -5 mm (extend.)	**012 561 0**
	■ Hexagon screwdriver, warped a/f -6 mm (extend.)	**012 562 8**
Maintenance	■ Hexagon screwdriver, warped a/f -8 mm (extend.)	**012 563 6**
	■ Hexagon screwdriver, warped a/f -4 mm (with pin)	**016 549 2**
	■ Hexagon screwdriver, straight a/f -5 x 100 mm T-handle	**014 002 3**
	■ Hexagon box spanner a/f 5.5 hexagonal flange	**012 555 5**
	■ 2 x fillister socket-head screw DIN 912 M5x50-8.8 (zinc)	**014 798 2**
	■ Stud driver 6.453.01-9211-01	**137 784 1**
	■ Pin puller 6.451.01-9211-02	**137 215 7**
	■ Pressing pin 6.452.01-9211-0001	**137 216 5**
	■ Bracket plate 6.452.01-9211-0003	**138 367 1**

4.3 Changing nominal diameter

4.3.1 Preparation

- Select protective nozzles according to Chapter 4.2
- Switch off drive and wait for standstill
- Move test material out of the sensor system
- Move sensor system out of the test line

Opening the roller guides

- Turn the locking bolt in ccw direction up to the stop
- Swivel out the roller guide

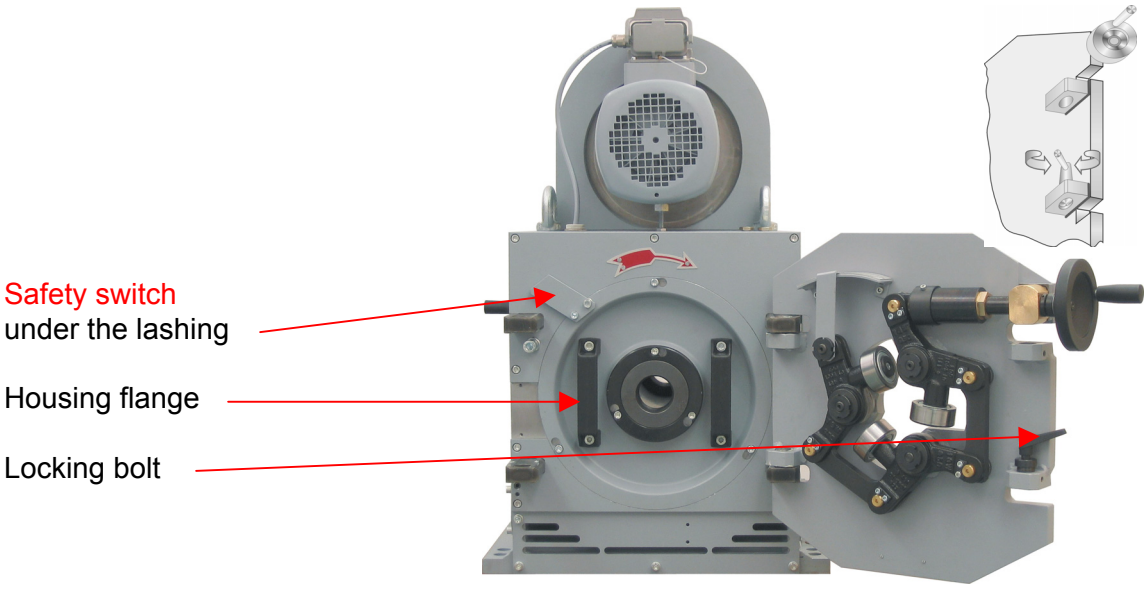

Fig. 4.1 Entry side with housing flange

WARNING!
For safety reasons, a safety switch interrupts the power supply of the drive as soon as the door of the drive cover is opened.
Do not change the function of the safety switch under any circumstances!

4.3.2 Remove Entry Nozzle

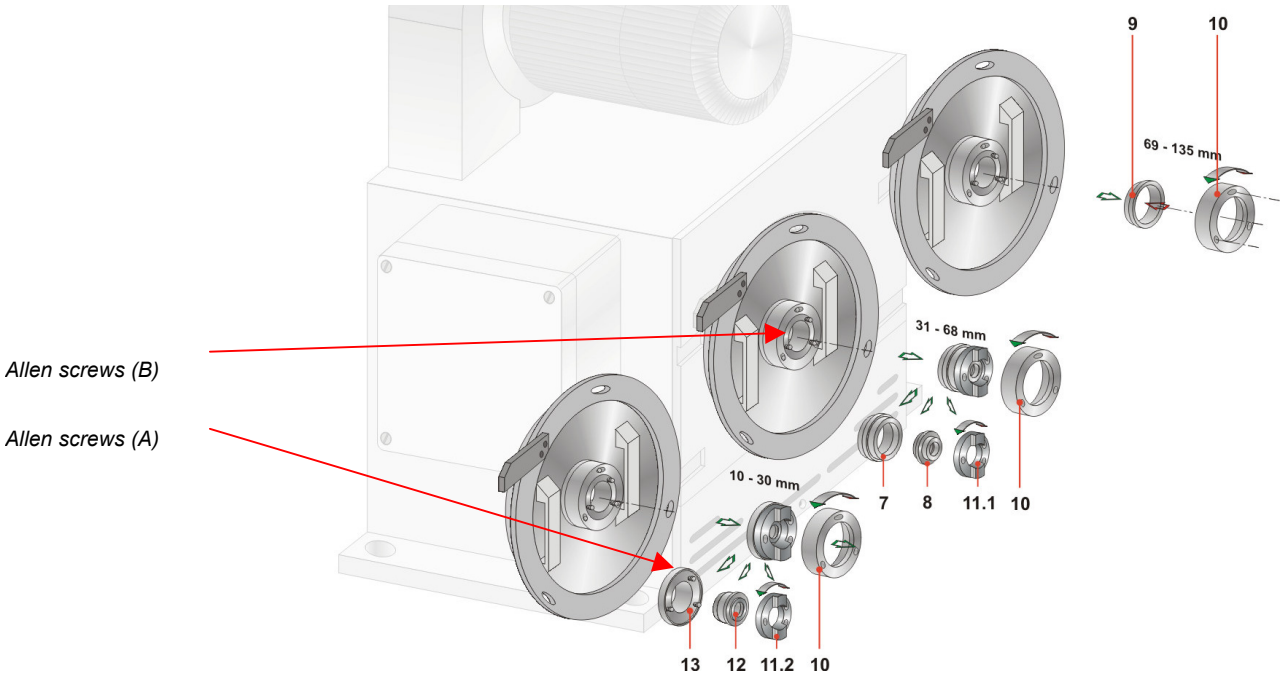

Fig. 4.2 Changing the entry nozzles, legend see Chap. 2.7

Nozzle 10 - 30 mm

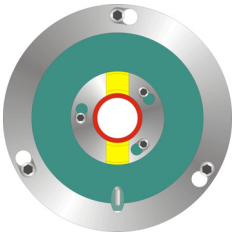

- Untighten three allen screws M 6x22 DIN 912 (A)
- Open and remove the clamping ring (11.2)
- Remove the nozzle (12) from the adapter (13), clamping ring (10) remains locked

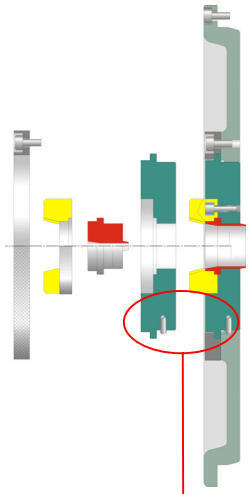

Change diameter range 10 - 30 >> << 31 - 68 mm

- Undo three allen screws M 8x20 DIN 912 (B)
- Open and remove/insert the clamping ring (10)
- Change adapter (13/7), **watch index pin in position 6 o'clock!**

Nozzle 31 - 68 mm

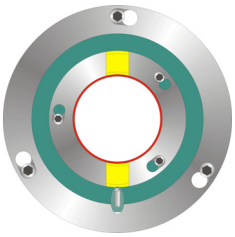

- Untighten three allen screws M 6x22 DIN 912 (A)
- Open and remove the clamping ring (11.1)
- Remove the nozzle (8) from the adapter (7), clamping ring (10) remains locked

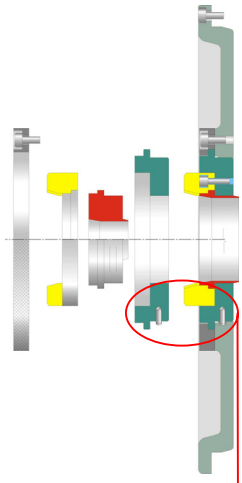

Change diameter range 31 - 68 >> << 69 - 135 mm

- Untighten three allen screws M 8x25 DIN 912 (B)
- Open and remove/insert the clamping ring (10)
- Change adapter (7), **watch index pin in position 6 o'clock!**

Nozzle 69 - 135 mm

- Untighten three allen screws M 8x20 DIN 912 (B)
- Open and remove the clamping ring (10)
- Remove the nozzle (9) from the housing flange (6).

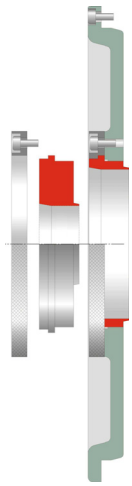

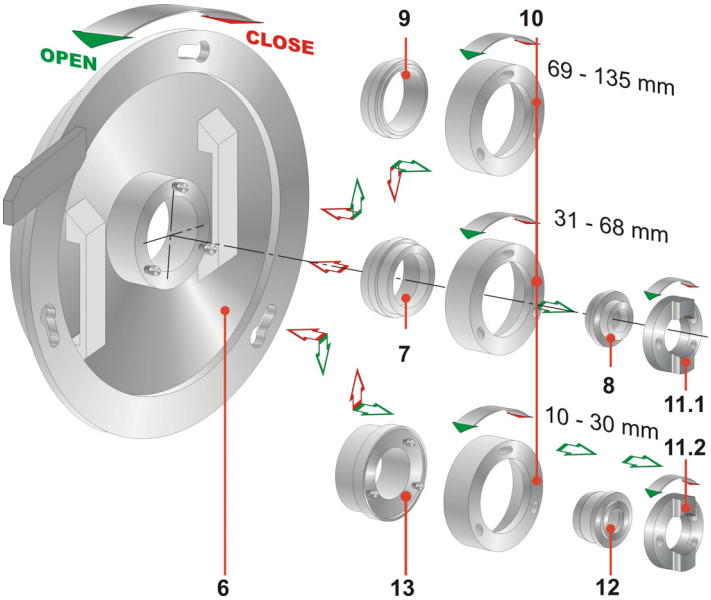

Fig. 4.3 Entry nozzles, legend see Chap. 2.7

4.3.3 Adjusting nominal diameter

Housing flange

- Unscrew three allen screws M 6x10 DIN 912 (C)
- Turn ccw and remove housing flange

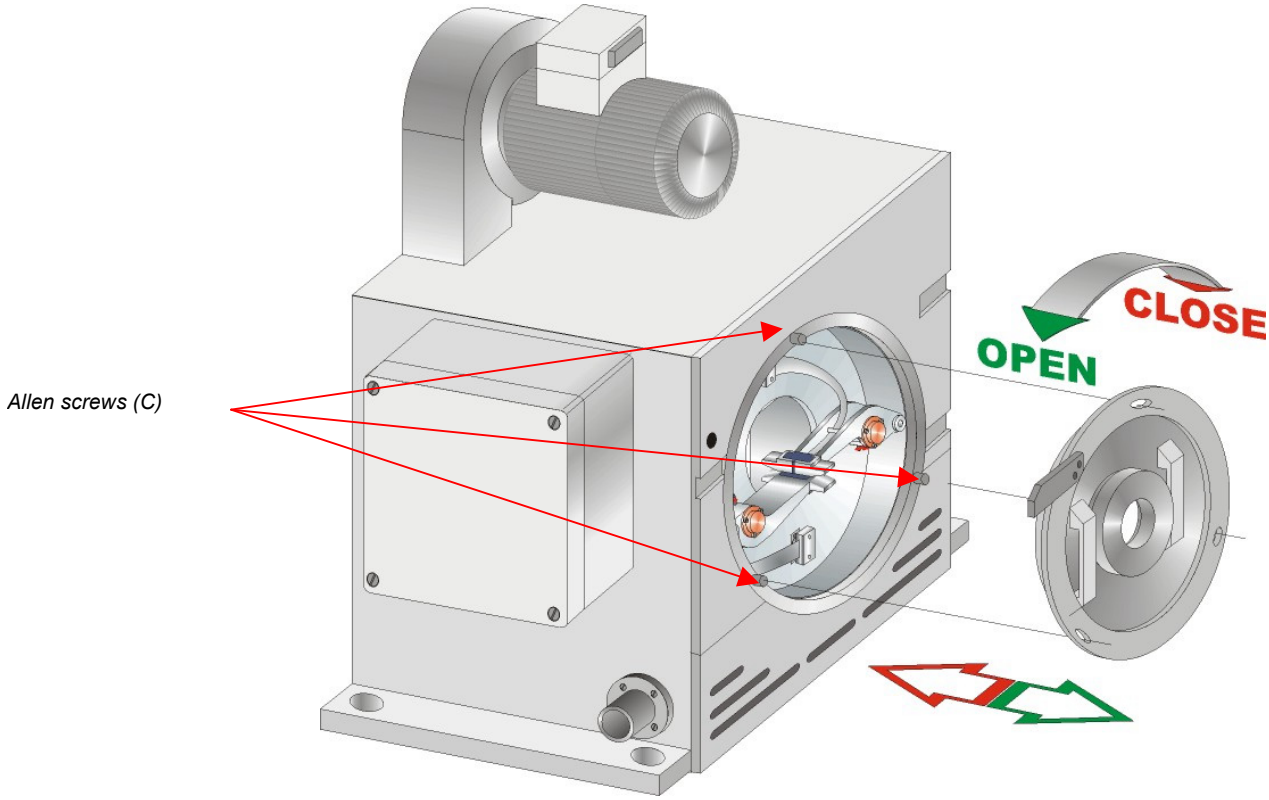

Fig. 4.4 Housing flange

Note!
Mass housing flange approx. 17 kg!

Recommended settings

Recommended test heads see in the opposite table. The diameter adjustment on the scale should be according to the selected nozzle. For selection refer to 4.2.1 Selection of the protective nozzles

bright material Fe - Nfe - Aust	raw from rolling Fe	track width BS
6.453.01-2311	6.453.03-2311	2 x 2.5 mm
6.453.01-2321	6.453.03-2321	2 x 5.0 mm
6.453.01-2331	6.453.03-2331	2 x 10 mm

While considering this setup recommendations a sufficient probe protection (**A_{PK} - A**) of minimum 0.2 mm is given.

Nozzle diameter DD [mm]	Scale
10 up to 16.9	DD – 1.4
≥ 16.9 up to 132	DD – 2.6

With worse testing conditions, e.g. drawing line with bent ends or reduced guidance quality, a higher probe protection is given with that scale setting:

Nozzle diameter DD [mm]	Scale
10 up to 132	DD

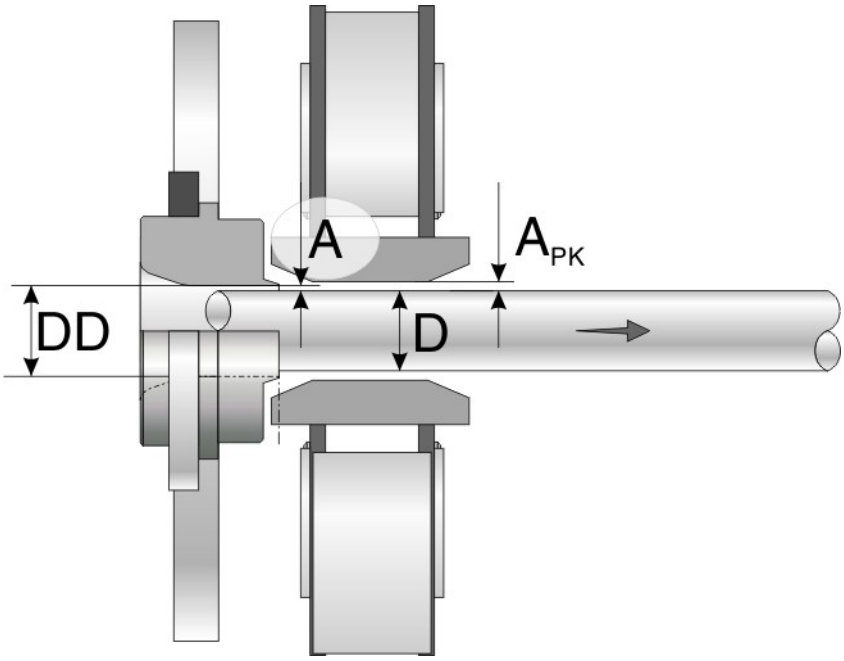

Fig. 4.5 Definition of the settings on the test head

Diameter setting

WARNING!
Never adjust the scale diameter to values higher than 132 mm! Overwinding can snap off the test heads from the cam disk and test heads will be clamped when reverse winding!

- Relax two clamping screws (D), approx. ½ turn
- Adjust probe lever to the new nominal diameter with hexagon screw-driver a/f 5 according to the scale
- Tighten two clamping screws (D), approx. ½ turn

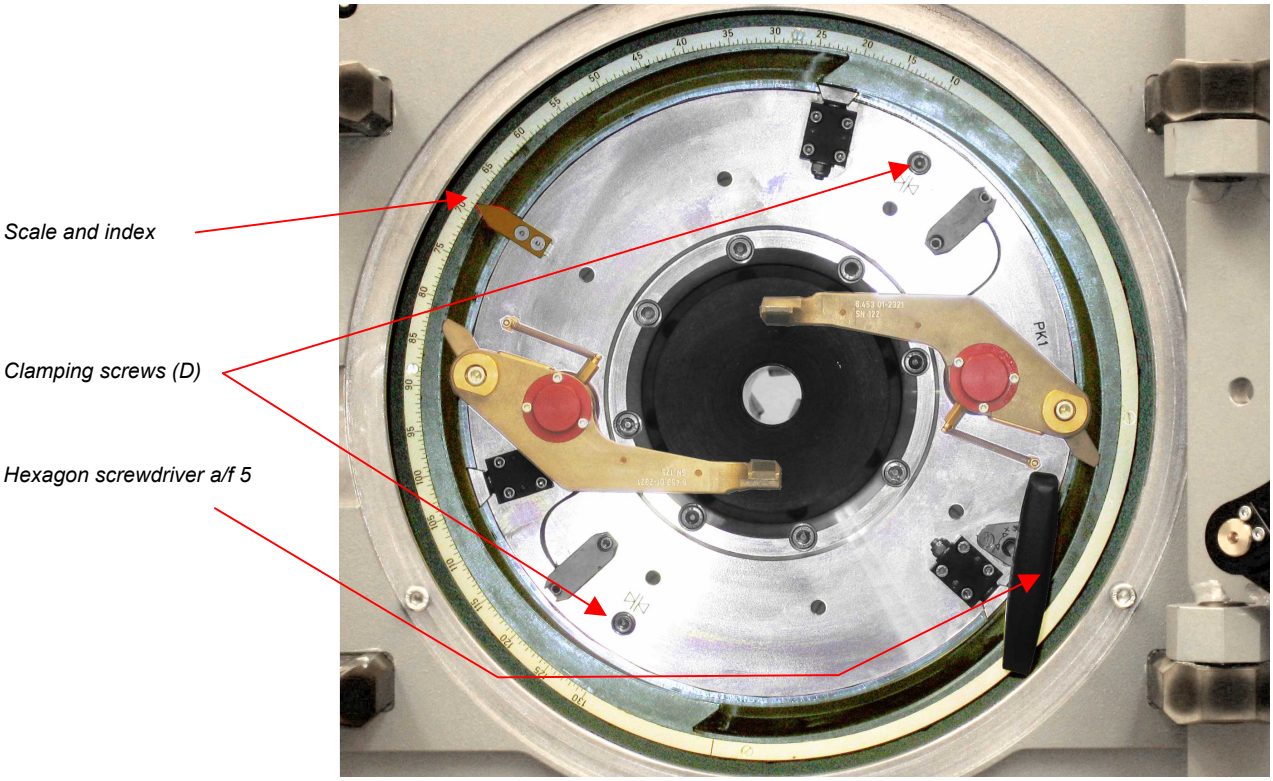

Fig. 4.6 Diameter setting

Fit the housing flange

- Fit the housing flange with bayonet by turning cw
- Clamp with three allen screws M 8x16 DIN 912 (C) with 12 Nm

4.3.4 Remove exit nozzles

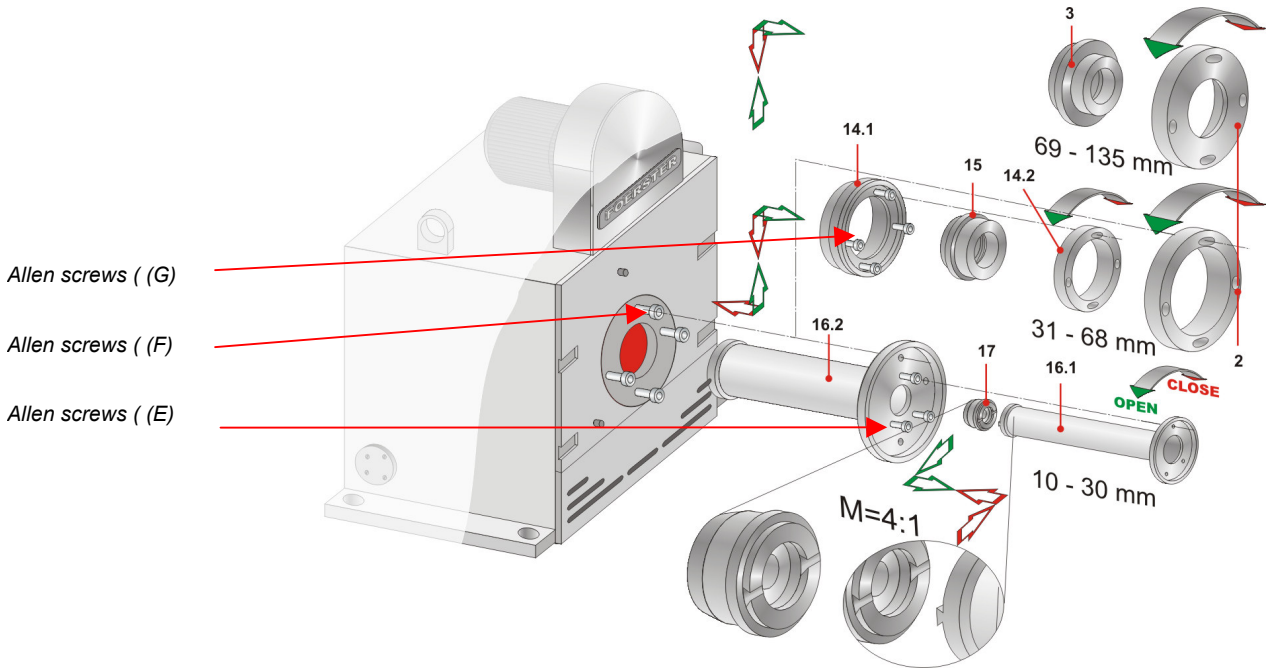

Fig. 4.7 Nozzle changing exit side, legend see Chap. 2.7

Nozzle 10 - 30 mm

Note!
Outer sleeve (16.2) remains fitted!

- Untighten three allen screws M 6x25 DIN 912 (E)
- Remove inner sleeve (16.1) with exit nozzle fitted (17) from outer sleeve (16.2)
- Remove exit nozzle (17) with dovetail from inner sleeve (16.1)

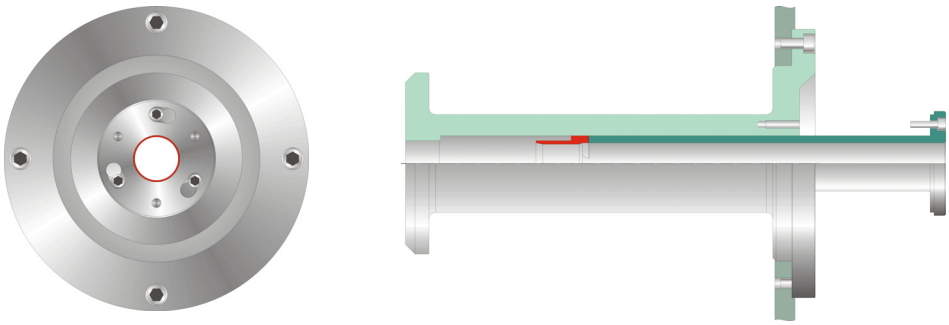

Change diameter range 10 - 30 >> << 31 - 68 mm

- Untighten three allen screws M 8x20 DIN 912 (F)
- Remove / insert nozzle holder exit (16)
- Remove / insert adapter (14.1)
- Insert and tighten clamping ring (2)

Nozzle 31 - 68 mm

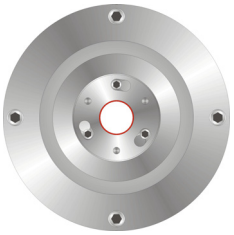

Note!
The nozzle adapter (14.1) remains fitted!

- Untighten three allen screws M 6x22 DIN 912 (G)
- Remove adapter (14.2)
- Pull out exit nozzle (15) of the nozzle adapter (14.1)

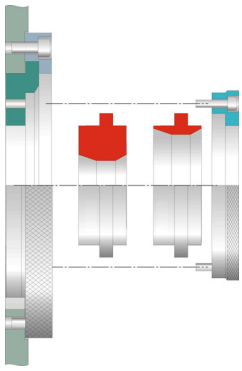

Change diameter range 31 - 68 >> << 69 - 135 mm

- Untighten three allen screws M 8x20 DIN 912(F)
- Remove/insert nozzle adapter (14)

Nozzle 69 - 135 mm

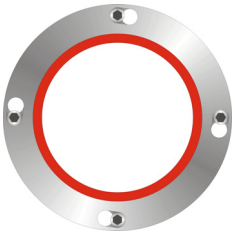

- Untighten three allen screws M 8x20 DIN 912 (F)
- Open and remove clamping ring (2)
- Pull out exit nozzle (3)

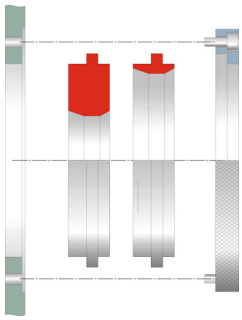

4.3.5 Fitting protective nozzles

Select nozzles according to Chap. 4.2.1

Note!
Clean all parts before fitting them carefully!
Check for wear each time before using them!
Do not use worn nozzles

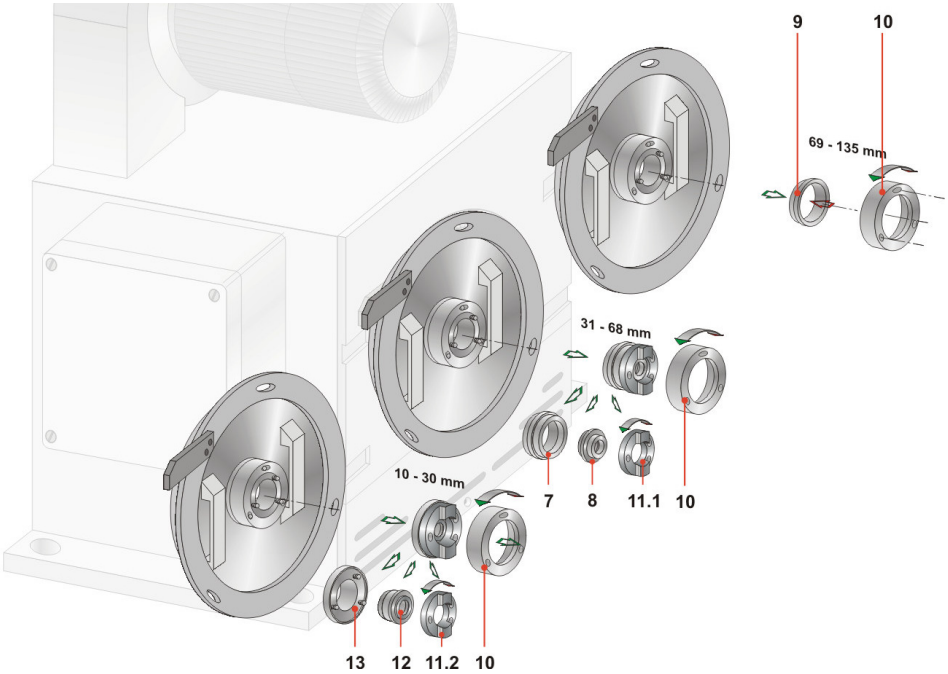

Fig. 4.8 Fitting nozzles entry side, legend see Chap.2.7

WARNING!
Adjust the test heads to the nominal diameter of the protective nozzles before inserting the nozzle (refer to 4.3.3)!
Inserting the nozzle into a test head arrangement that is too narrow can cause damage to the test heads and/or nozzles.

NOTE!
Use only nozzle pairs with the same nominal diameter!

Entry nozzle 10 - 30 mm

- Fit the entry nozzle (12) into the inserted adapter (13) by turning it
  The clamping ring (10) remains closed
- Fit the clamping ring entry (11.2) onto the adapter ring (13) and clamp it
- Tighten three allen screws M 6x22 DIN 912 (A) with 6 Nm

Entry nozzle 31 - 68 mm

- Fit the entry nozzle (9) into the adapter (7) by turning it
  the clamping ring (10) is closed
- Fit clamping ring entry (11.1) onto adapter ring (7)
- Tighten three allen screws M 6x10 DIN 912 (A) with 6 Nm

Entry nozzle 69 - 135 mm

- Fit the entry nozzle (9) into the housing flange (6) by turning it
- Fit clamping ring entry (10)
- Tighten three allen screws M 8x20 DIN 912 (B) with 12 Nm

Exit nozzle 10 - 30 mm

Note!
The outer sleeve (16.2) is already in place

- Fit the exit nozzle (17) onto the dovetail guide of the inner sleeve(16.1)
- Insert the inner sleeve(16.1) with exit nozzle (17) fitted into the outer sleeve (16.2)
- Tighten three allen screws M 6x25 DIN 912 (E) with 6 Nm

Exit nozzle 31 - 68 mm

- Fit the exit nozzle (15) into the adapter by turning it
- Fit the clamping ring exit (14.2)
- Tighten four allen screws M 6x22 DIN 912 (GE) with 6 Nm

Exit nozzle 69 - 135 mm

Note!
The adapter (14.1) is **not** in place

- Fit the exit nozzle (3) into the faceplate by turning it and fit the clamping ring exit (2)
- Tighten four allen screws M 8x20 DIN 912 (F) with 12 Nm

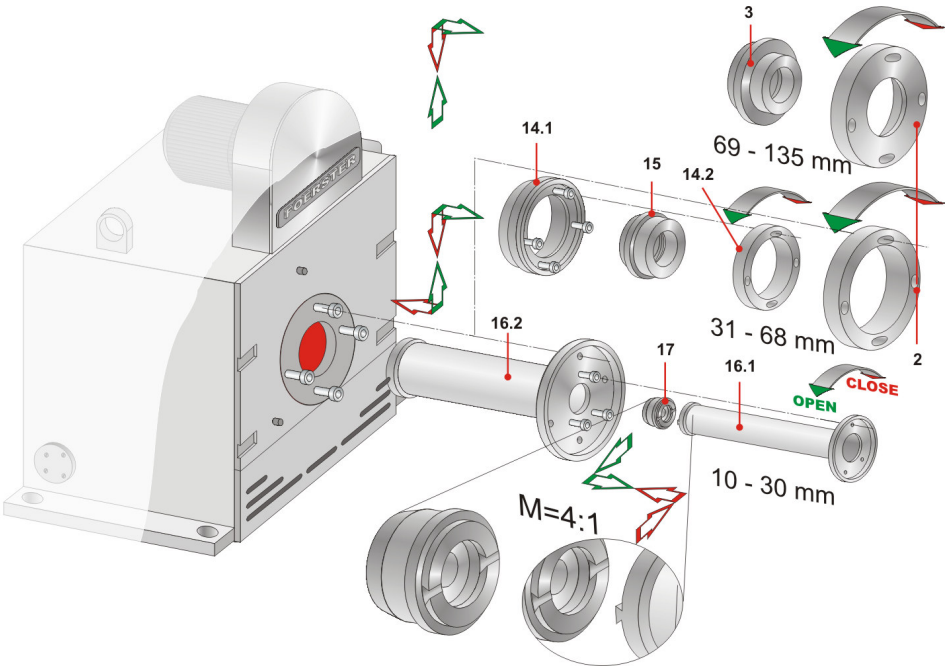

Fig. 4.9 Fitting nozzles exit side, legend see Chap.2.7

4.3.6 Setting the roller guides

- Set the roller guide coarsely to the nominal diameter in accordance with the scale (in the case of new track rollers, the clear diameter of the track rollers corresponds exactly to the scale setting)

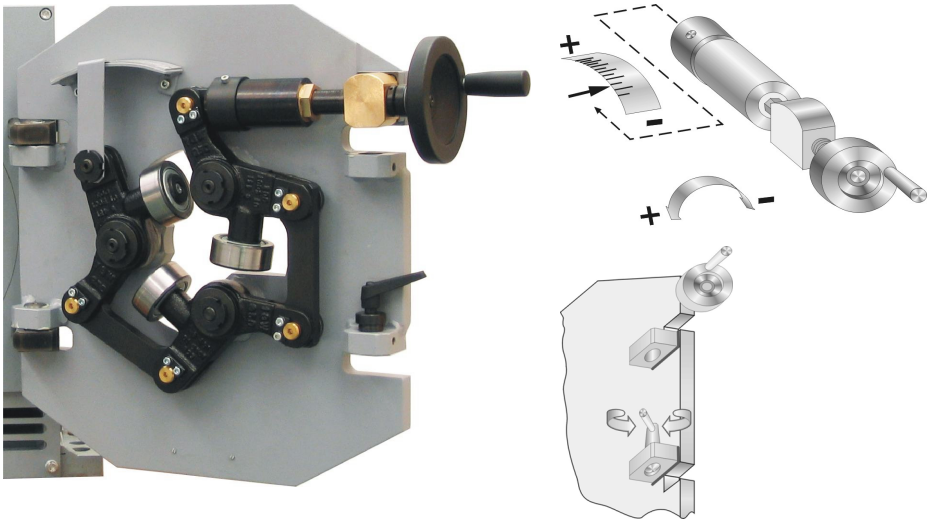

Fig. 4.10 Setting the roller guides

- Swivel in the roller guide, turn the locking bolt in cw direction up to the stop
- If required, set track roller approx. 0.4 to 1.0 mm closer in diameter (rotating by 40°, max 100° at the hand wheel)

NOTE!
A lower pretension of the track rollers protect both the test material and track rollers. A higher pretension improves the quality of guidance.

4.3.7 Positioning the transmitter system in the testing line

- Move the lifting table back into the testing line and lock it
- Adjust the table to the height of the testing axis and lock it

NOTE!
The test piece must run centrically through the transmitter system!

4.4 Rotational speed preselection

- ■ MOC SB motor control
- □ Rotational speed switchable 1,500 or 3,000 rpm

The motor control supplies the required voltages and currents and contain the necessary switching and safety devices (contactors, motor protection switches, protective circuits).

Achievable throughput speeds

Speed	v [m/s] with test head track width		
rpm	2 x 2.5 mm	2 x 5 mm	2 x 10 mm
1,500	0.25	0.5	1.0
3,000	0.5	1.0	2.0

Tab. 4.2 Achievable throughput speeds

4.5 Switching on motor

NOTE!
Check the diameter and height settings of the sensor system before switching on.

The operating elements used to switch on the rotating head drive are located on the motor control.
The motor control is installed in a separate housing.

Acceleration times:	approx. 4 sec (1,500 rpm) approx. 10 sec (3,000 rpm)
Deceleration times without braking:	approx. 210 sec (1,500 rpm) approx. 360 sec (3,000 rpm)
Deceleration times with braking:	approx. 15 sec (1,500 rpm) approx. 40 sec (3,000 rpm)

The rotating head must run quietly and without loud noises when no test material is present.

Whistling noises when starting or braking indicate that the belt needs to be retensioned.

NOTE!
Switch off the drive immediately if grinding noises are heard.

Possible causes:
Incorrect nozzles inserted
Nozzle or holders not securely fitted
Nozzle not fitted in end position

Notes:

5 MAINTENANCE

5.1 Maintenance schedule

WARNING:
Always switch off the drive and wait for the machine to stop before performing work of any kind!

Do not touch or tamper with the sensor system, with the rotating unit operating!

Deceleration times:
without braking approx. 6 minutes
with braking approx. 40 seconds
(Values are valid for maximum rotational speed 3,000 rpm)

Important! Parts which are worn or damaged must be replaced immediately.				
	when changing dimensions	**each shift**	**each week**	**each month**
Roller guide		clean, check track rollers for wear and damage	oil joints, oil spindle, oil hinges	
Nozzles	Remove, check thoroughly and visually for damage	clean, clean for wear and damage		
Rotating parts		clean	clean, check for wear and damage	
Testing heads	clean, check for wear and damage	clean, check for wear and damage		Remove, check thoroughly and visually for damage
Belt				check tension check for wear and damage

5.2 Cleaning

WARNING!
Do not use cold cleaner!
Isopropyl alcohol or denatured ethyl alcohol are recommended as cleaning agents. Take care of directions of use given by the producer of cleansing agent!

- Make sure the areas around the rotating parts are clean!
  Remove abrasion and dirt with an industrial vacuum cleaner
- Clean rotating disc and test heads with alcohol
- Clean test piece sensor (external) with a soft cloth
- Lightly oil bright metallic parts after cleaning
- For cleaning the inner chamber remove cover
  untighten three allen screws M 8x16 DIN 912
- Do not blow compressed air into open chamber!

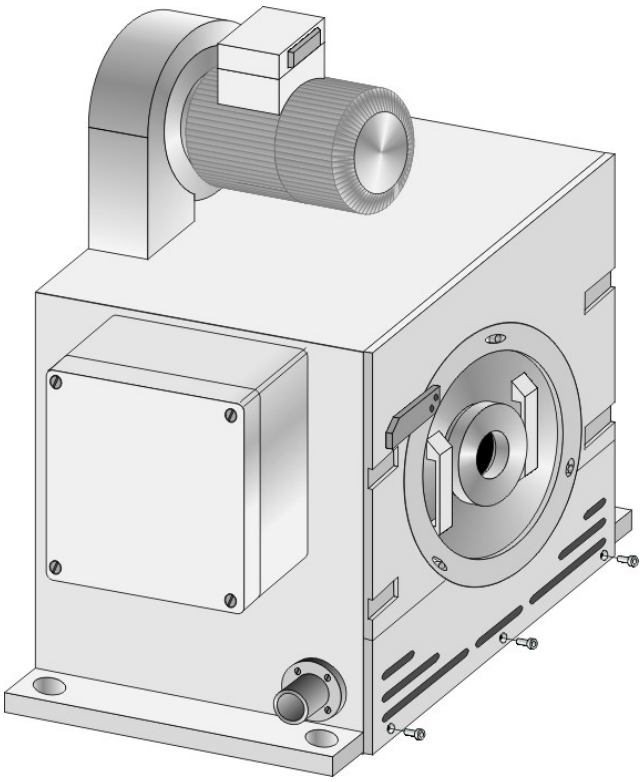

Fig. 5.1 Cleaning the inner chamber

5.3 Removing and fitting the test heads

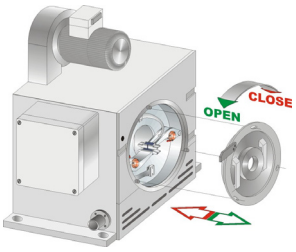

NOTE!
Make sure the plug contacts are clean!

- Open housing flange

- Untighten three allen screws M 8x16 DIN 912 (C)
- Turn and remove housing flange

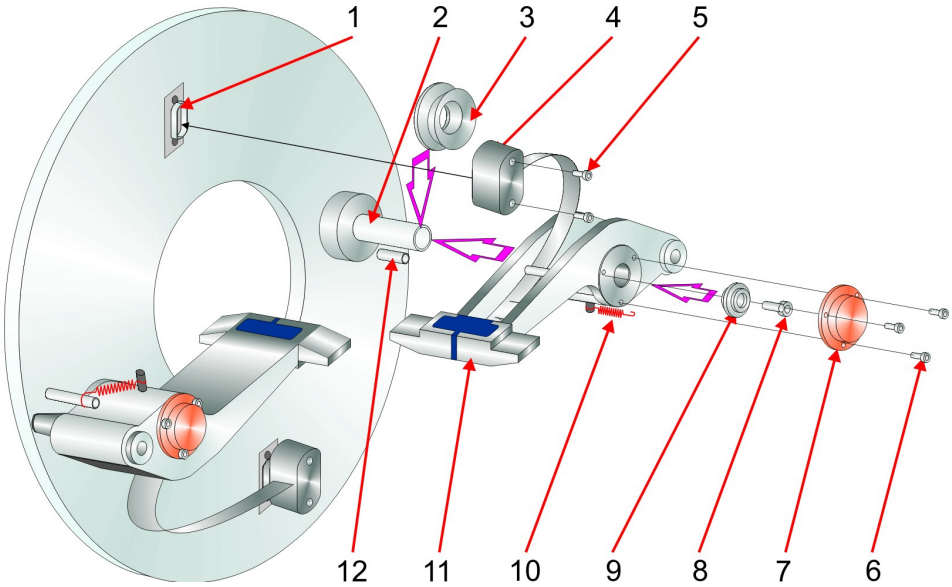

Fig. 5.2 Removing the test heads

- Loose the test head

- Untighten three allen screws (6) M3 x 8 DIN 912
- Remove cover (7)
- Untighten allen screws (8) M5 x 10 DIN 912
- Remove washer (9)

- Remove the test head

- Untighten two allen screws (5) M3 x 16 DIN 912
- Pull off the plug (4)
- Unhook tension spring (10) from spring pin (12 by undoing the nut
- Take out the test head (11)

WARNING!
Use test heads as a set with the same specifications. The type number is found on the side of the test heads.

- Clean all parts, especially the connection pin (2), the flange bushings (ref. Fig. 5.5) , bearing ring seal (3) and test head bearing bushing

Reassembling vice versa.

- Note the correct installation position:
  the stop on the test head must contact the control edge of the rotating disk.
- Do not kink or twist the ribbon cable
- Check mobility of the test head
- Engage the tension spring in the annular grove of the spring pin,
  to force the test head to adjusting position during stand still of rotor

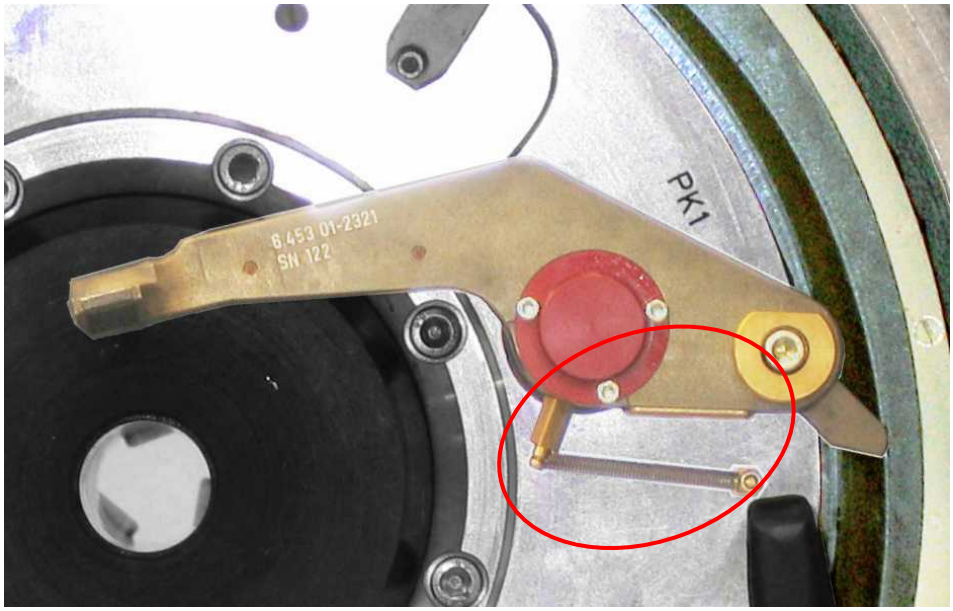

Fig. 5.3 Test heads fitted, lid (7) not assembled, spring in standard position

5.4 Replacing parts subject to wear

NOTE!
Test heads with worn slide-on or protective strips can be repaired properly only by the manufacturer!

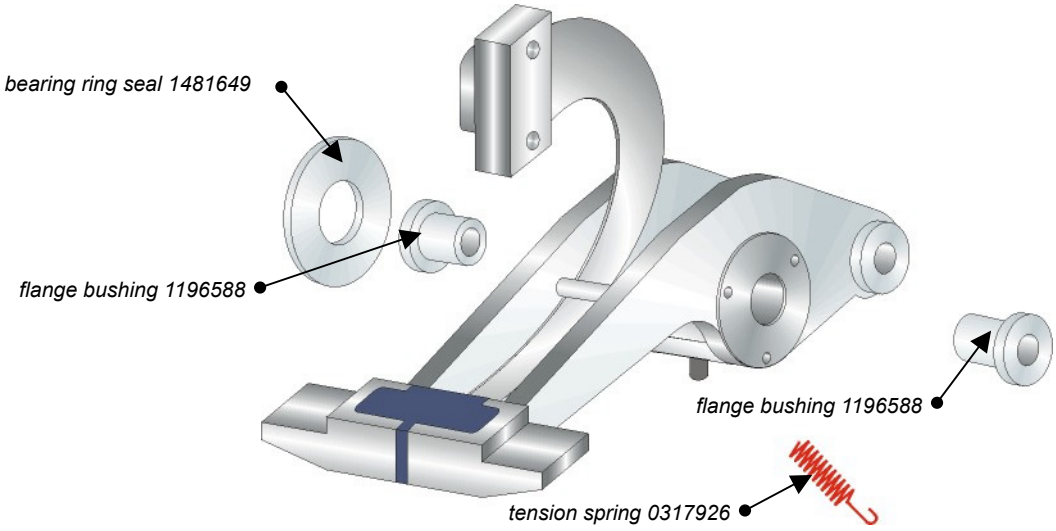

Fig. 5.4 Parts subject to wear in the test heads

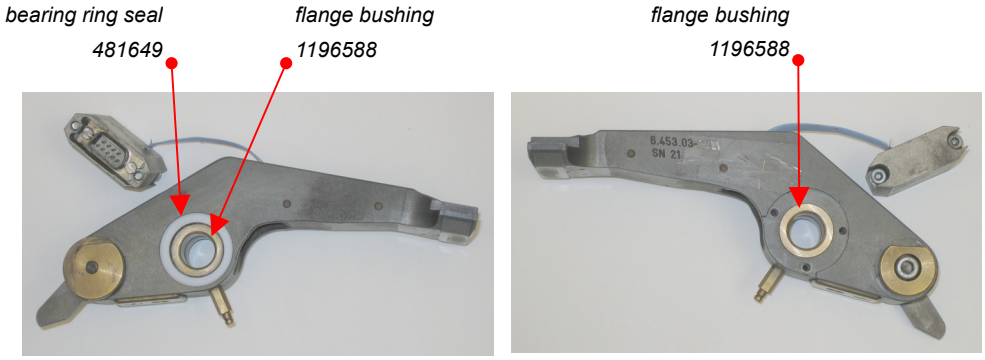

Fig. 5.5 Wear parts back side test head front side

5.5 Maintenance of the roller guides

5.5.1 Lubrication

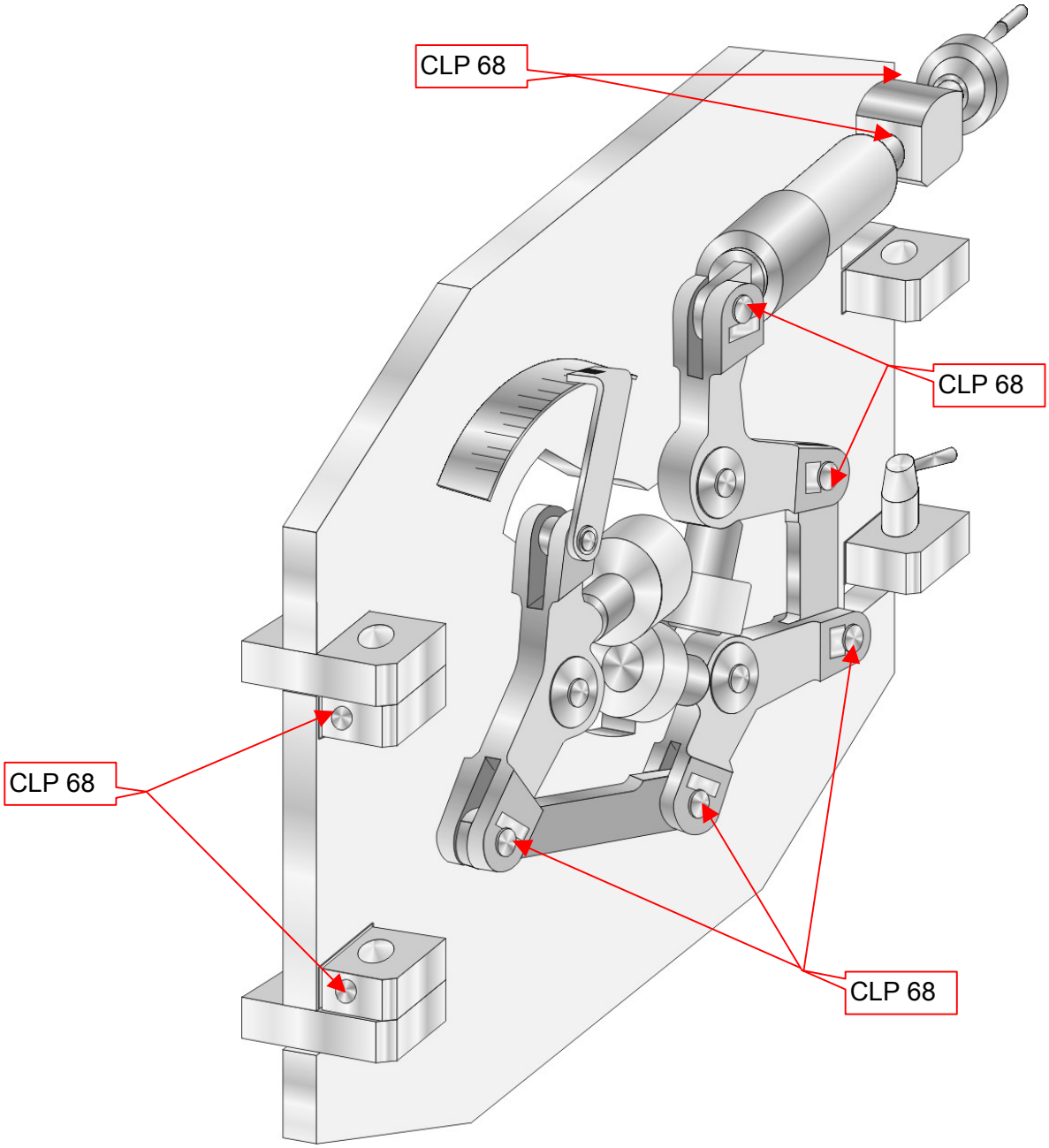

Fig. 5.6 Lubricating the roller guide

The lubrication points marked with CLP 68 must be lubricated 1 x weekly with lubricant oil of ISO viscosity class 68 (DIN 51519) or similar

5.5.2 Replacing the track rollers

Note!
Track rollers may be changed with the roller lever either fitted or removed. Always change all three rollers at the same time!

- When roller lever (4) fitted, open the roller guides to the maximum diameter
- Unscrew the allen screw (1) M 6x40 DIN 912
- Draw off track roller (3) with roller pin (2) inserted
- Push roller pin (2) out of the track roller (3)
- Reassemble vice versa

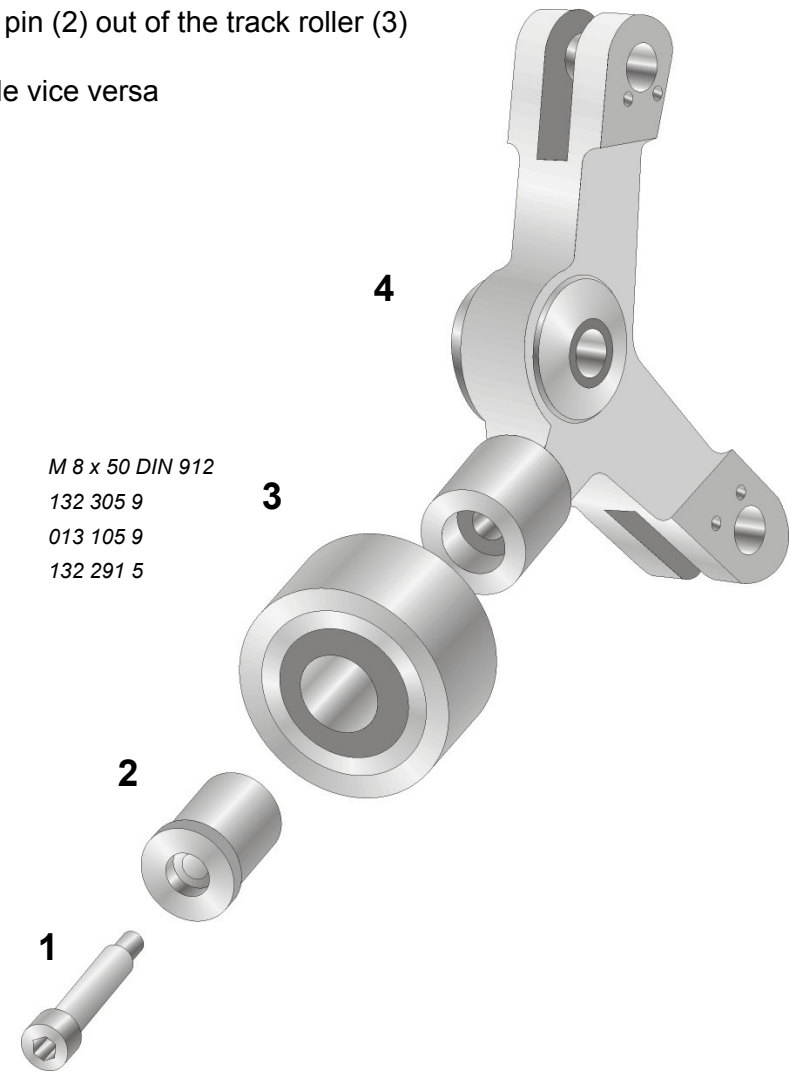

1	*Allen screw*	*M 8 x 50 DIN 912*
2	*Roller Pin*	*132 305 9*
3	*Track roller*	*013 105 9*
4	*Lever*	*132 291 5*

Fig. 5.7 Replacing the track rollers

5.5.3 Removing the roller guide levers

Note!
The levers of the roller guide should be removed for replacement of the track rollers or for thorough maintenance and care of the roller guide

- Remove retaining plates (6)
- Pull out bolts (5) of lever (4)
- Remove fishplates (11)
- Unscrew groove nut (8)
- Remove washer (9), shim washer (10) (if present), O-ring (2) and thrust washer (3)
- Pull lever (4), thrust washer (3) and O-ring (2) off bearing pin (1)

- Reassemble vice versa

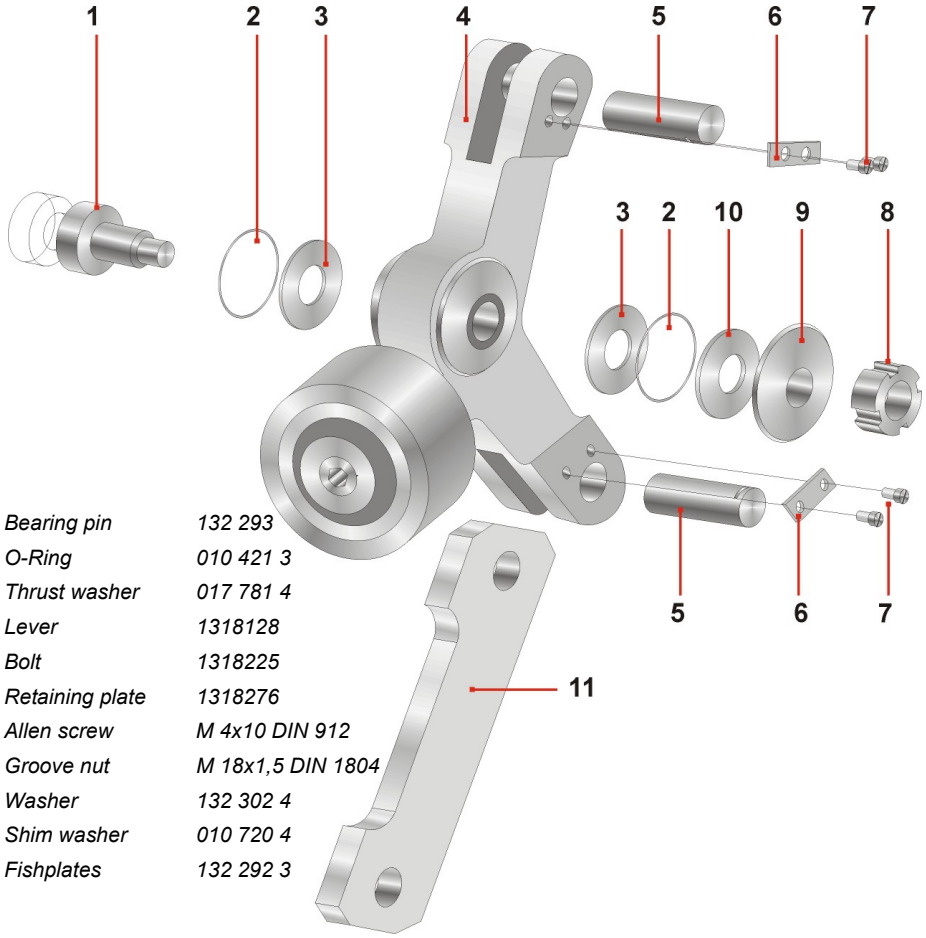

1	*Bearing pin*	*132 293*
2	*O-Ring*	*010 421 3*
3	*Thrust washer*	*017 781 4*
4	*Lever*	*1318128*
5	*Bolt*	*1318225*
6	*Retaining plate*	*1318276*
7	*Allen screw*	*M 4x10 DIN 912*
8	*Groove nut*	*M 18x1,5 DIN 1804*
9	*Washer*	*132 302 4*
10	*Shim washer*	*010 720 4*
11	*Fishplates*	*132 292 3*

Fig. 5.8 Removing the roller guide levers

5.6 Checking and changing the cone belt

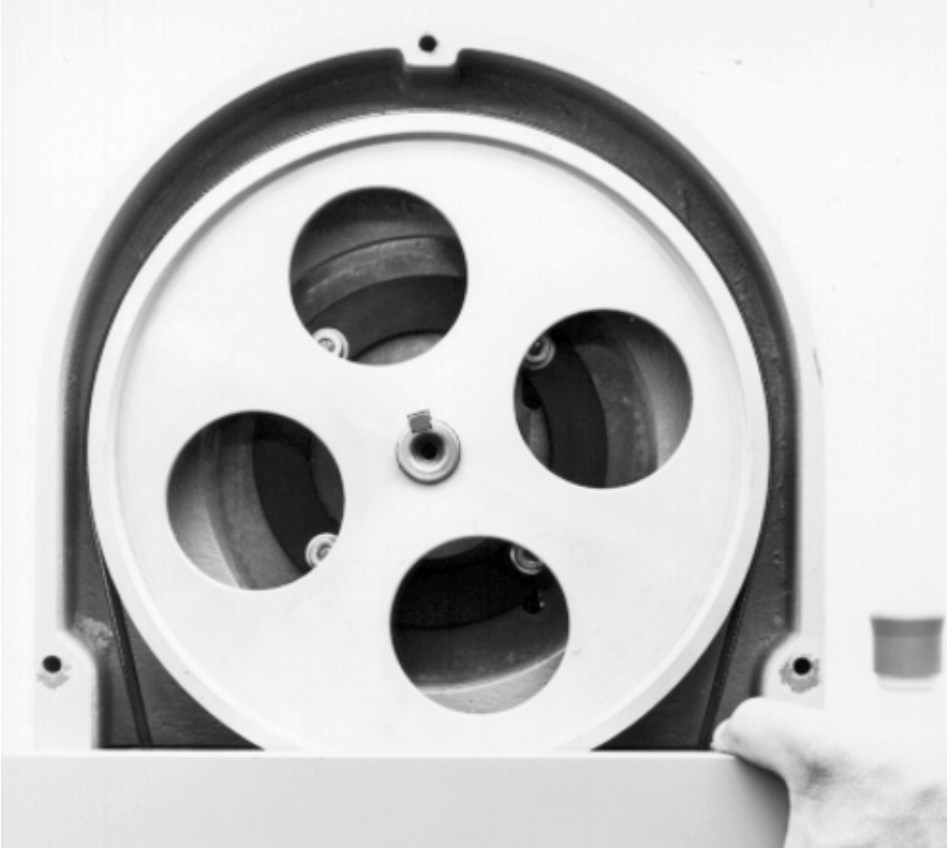

Fig. 5.9 Checking the belt tension

- Set the belt's bowing under load so that it does not whistle or lisp during acceleration

NOTE!
For exact tensioning check with a spring balance!

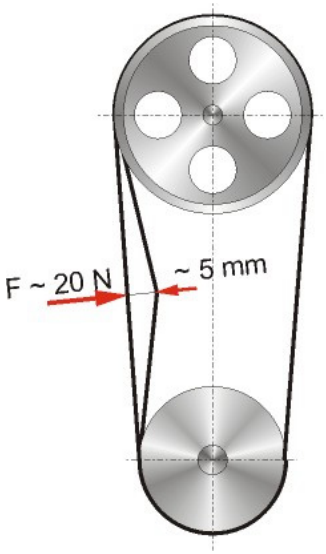

Fig. 5.10 Tensioning check with a spring balance

- Loosening the clamping screws M 8x25 DIN 912 (accessible through the 4 holes in the belt pulley

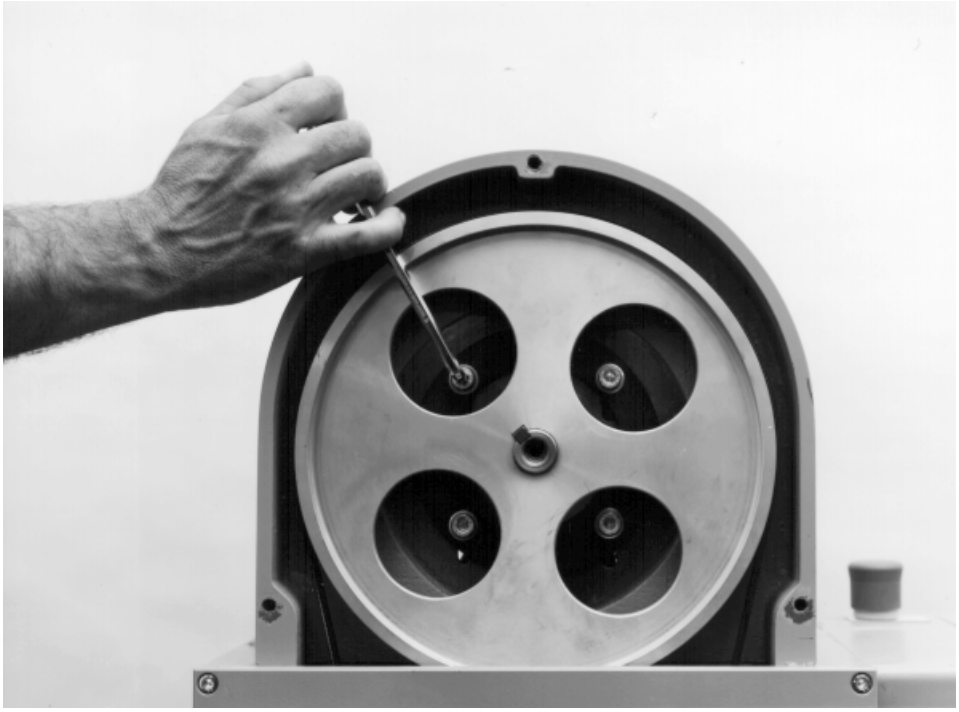

Fig. 5.11 Setting the belt tension, loosening the engine mount

- In order to tension the belt, adjust the hexagon screw M 8x25 DIN 933 and lock with nut M 8 DIN 934

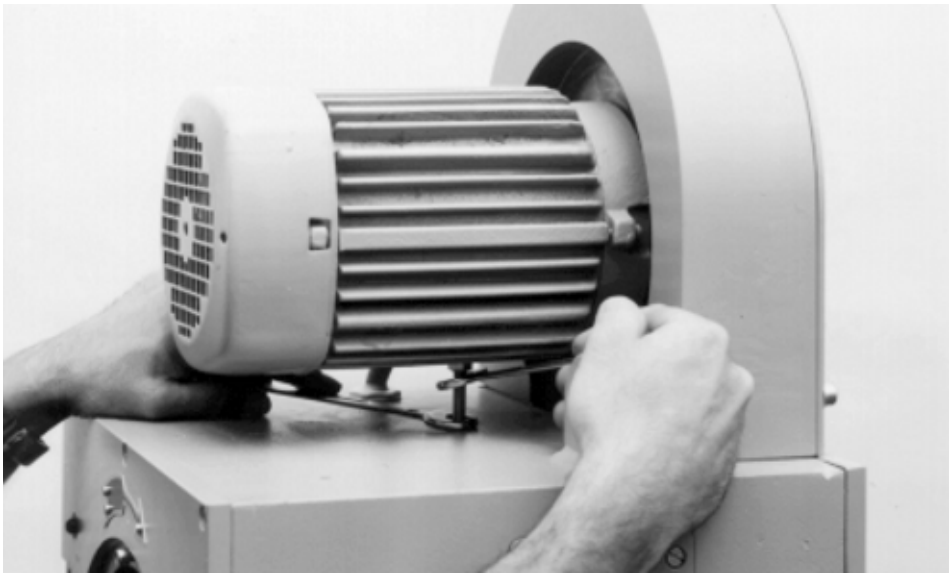

Fig. 5.12 Setting the belt tension, setscrew and locknut

Changing the Belt

- Loosening the clamping screws M 8x25 DIN 912 (ref. to Fig. 5.12)
- Loosening the hexagon screw M 8x25 DIN 933 and lock M 8 DIN 934 (ref. to Fig. 5.13), lower the motor
- Unscrew eight allen screws M 8x25 DIN 912

WARNING!
Mass of the face plate approx. 26 kg!

- Remove face plate
- Change the cone belt

8 screws
M 8x25 DIN 912

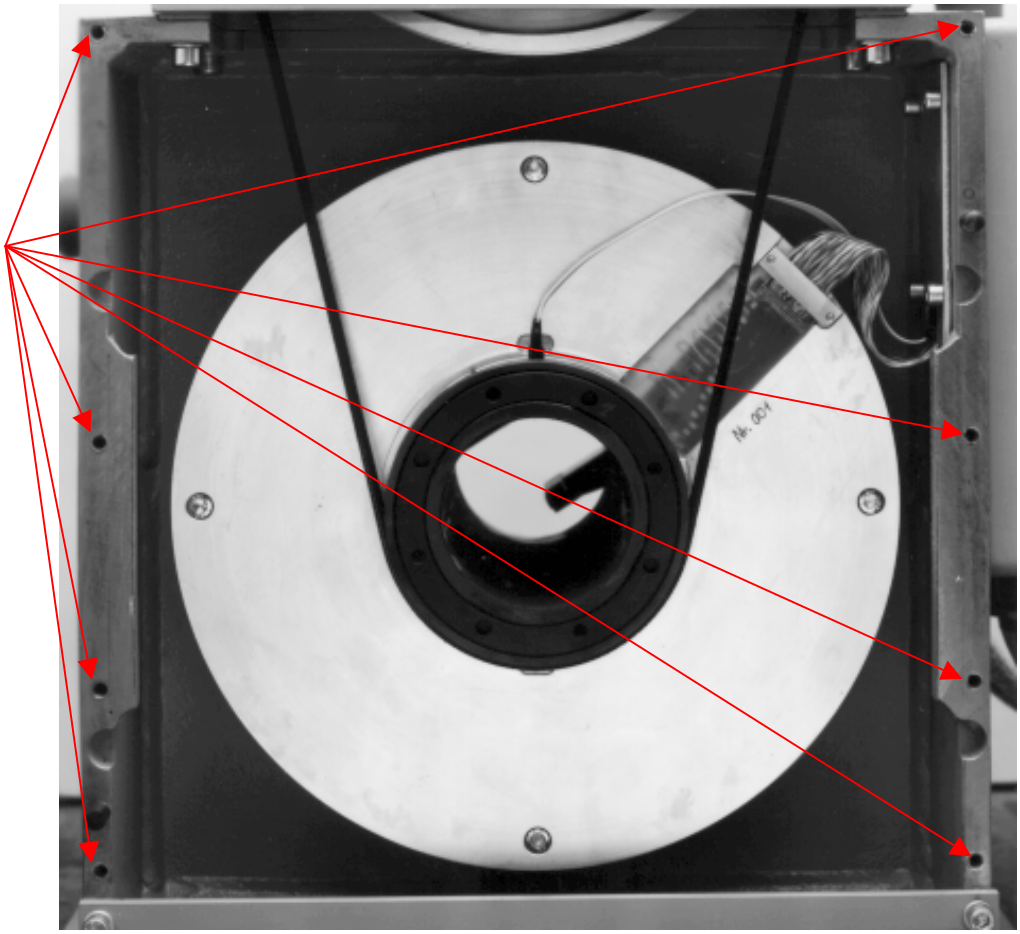

Fig. 5.13 Changing the cone belt, face plate removed

NOTE!
Before the exit-side face plate is screwed on, the special washers fitted on the screws must be checked for damage (earth fault). They must be replaced by new ones if necessary!

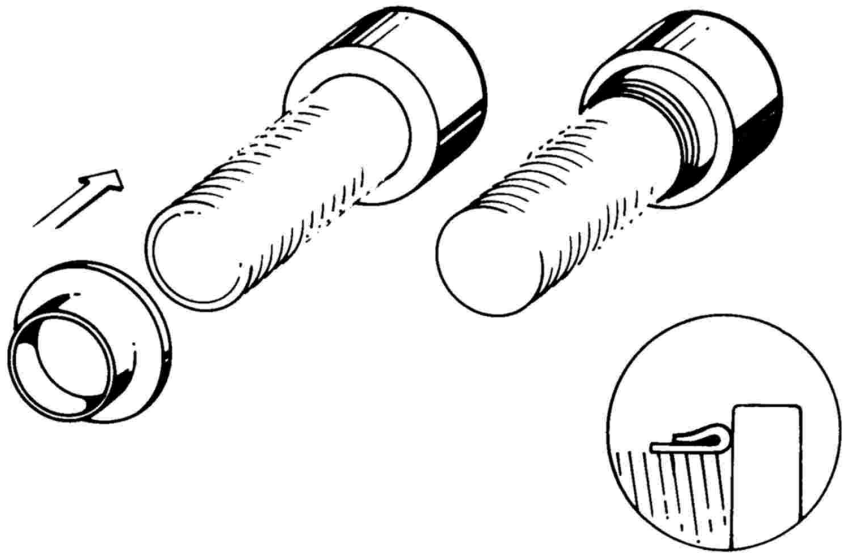

Fig. 5.14 Special washer

left: after tightening *right: initial condition*

- Put on faceplate, tighten eight allen screws M 8x25 DIN 912 with **max. torque of 8 Nm**
- Tension the belt according to Chap. 5.6

5.7 List of parts subject to wear

Name	Part-No. Order-No.		Quantity fitted in the sensor system	Recommended minimum quantity on stock
Rotating head	165 668 6 6.453.01-1301			
Belt	016 527 1 Poly-V 550; J4 Messrs. Flender		1	1
V-ring	016 430 5 VA-0025 Messrs. Busak & Lyken		2	4
Special washer Nylite Siegel D = 8	017 732 6 950060.00 Messrs. Kerb-Konus		8	25
Test head, alternatively:				
Test head, track width 2 x 2.5	148 076 6 6.453.01-2311	180 739 0 6.453.03-2311	2	4
Test head, track width 2 x 5	148 169 0 6.453.01-2321	166 454 9 6.453.03-2321	2	4
Test head, track width 2 x 10	148 078 2 6.453.01-2331	180 764 1 6.453.03-2331	2	4
Tension spring	031 792 6 Messrs. Gutekunst		2	4
Flange bushing	119 658 8		4	8
Bearing ring seal	148 164 9		2	4
Roller guide	130 061 0 6.453.01-5001			
Track roller	013 105 9 LR 305 705 Messrs. SKF		6	12
O-ring	010 421 3 Simirit 72 NBR – 872, Messrs. Freudenberg		12	24
O-ring	011 107 4 Simirit 72 NBR – 872, Messrs. Freudenberg		12	42
O-ring	008 508 1 Simirit 72 NBR – 872, Messrs. Freudenberg		2	4
Nozzle:	**Nominal diameter to be mentioned on ordering**			
Entry nozzle	6.453.01-3211		1	1
Exit nozzle	6.453.01-3221		1	1

Notes:

Institut Dr. Foerster GmbH & Co. KG
Division TS Semi-finished Product Testing
In Laisen 70
72766 REUTLINGEN
GERMANY

Telephone: +49 7121 140-270
Fax: +49 7121 140-459
E-mail: ts@foerstergroup.de
Internet: www.foerstergroup.de

6.453 UA06/EN
Order no.: 182 688 3

Edition: 01/2006
Author: D.Sy