CIRCOGRAPH® DS
Sensor system Ro 65

6.452

Operating Instructions

Original Instructions

Introduction

These Operating Instructions are intended to be read, understood and observed in all points by the persons responsible for operating the equipment.

The complete Operating Instructions consist of the following sections:

1 Safety

2 Functional description

3 Installation

4 Operation

5 Maintenance

Knowledge of the Operating Instructions is essential for avoiding equipment faults and for ensuring trouble-free operation.

It is therefore of the utmost importance that the entire Operating Instructions are made known to and understood by all the appropriate persons.

Our Service Department or one of our Representatives will be happy to receive any suggestions for further improvements to these Operating Instructions. They will also be pleased to provide rapid and comprehensive answers to questions not covered by these Operating Instructions.

Copyright

Notes:

1 SAFETY

1.1 Dangers posed by this machine

The sensor system features protective safety devices. It has been subjected to a safety test and safety acceptance test. In the event of operating errors or misuse, the machine may pose dangers and risks to

- the life and limb of the operator,
- the machine and other operator's valuables and
- efficient operation of the machine.

All persons involved in installation, commissioning, operation, servicing and maintenance of the machine must

- be appropriately qualified and
- must strictly follow the information provided in these operating instructions.

Your safety is at stake!

1.2 Safety information and tips

The following symbols are used in these operating instructions:

DANGER!
This warns against dangers to persons. These sections provide you with information on what to do and what not to do in order to prevent personal injury.

WARNING!
These sections indicate possible damage to the test system. They provide information on what to do and what not to do in order to prevent damage to property.

NOTE!
These sections provide tips for the user on how to use the system better and also provide other useful information.

1.3 Use as intended

The sensor system is suitable only for non-destructive testing of **round material**.

Diameter range: see 2.4 Technical Data
Smaller diameters and larger diameters may not be admitted into the sensor system under any circumstances.

Material with a cross-section which is anything other than round may not be admitted into the sensor system under any circumstances.

The sensor system may be operated only in conjunction with a suitable conveying mechanism and a lifting table.

On no account may you convert or modify the sensor system arbitrarily, for reasons relating to safety.

DANGER!
Masses rotating at high speed pose a serious danger to your life if the machine is operated incorrectly.
Never touch the rotating sensor components.

NOTE!
The information on operation, servicing and maintenance prescribed in these operating instructions must be followed strictly.

1.4 Dangers posed by accessories

Transport mechanisms, lifting table and external control equipment must not render the protective safety devices of the sensor system inoperable.

1.5 Emissions

See 2.6 Environmental conditions.

1.6 Danger sources

The sensor system operates with a rotating test system and an attached roller guide system during operation. A person coming into contact with the roller guide or the rotating test system may suffer very serious injuries.

Switch off the drives before you put your hands into or touch the sensor system. Wait for all motions to cease!

Before carrying out servicing and cleaning work, switch off the drive for the sensor system and conveying mechanisms and disconnect the power supply (secure the master switch in position OFF).

Never remove protective safety devices or render them inoperable by making modifications to the system.

1.7 Workstations

The workstation is located on the electronic equipment cabinet or on the operating panel of the sensor system

Do not carry out any work or tamper in any other way with the sensor system when it is rotating.

1.8 Authorised operators

Only authorised personnel may work on the sensor system.
Please comply with the minimum legal age!

The operator is responsible for the safety of third parties in the work area.

The scopes of authority for the various activities on the sensor system must be clearly defined and complied with.

Untrained personnel pose a safety risk!

The operator must

- make the operating instructions available to the machine operator and
- make sure that the machine operator has read and understood them.

1.9 Personal safety equipment

You are to wear ear plugs, if the A-weighted equivalent sound pressure level at the workstations of the sensor system is greater than 85 dB(A). Sound pressure level for this equipment: see 2.4 Technical Data.

1.10 Safety measures at the installation location

The sensor system must be installed stably on a machine foundation provided for it and must be firmly anchored to the foundation. If this is not done, this will pose a potentially lethal risk.

NOTE!
Ensure that the area surrounding the workstation is always clean and unobstructed by issuing appropriate in-company instructions and conducting inspections.

1.11 Protective safety devices

The CIRCOGRAPH sensor system is shut down

- when opening the housing (safety switch on the rotor cover)
- with the switch on the operating panel or on the electronic equipment cabinet
- with the EMERGENCY-STOP switch on the operating panel (EMERGENCY-STOP has to be linked with motor control)

The protective safety devices

- are installed to ensure the safety of the operating staff
- may not be modified, removed or bypassed by making modifications to the sensor system under any circumstances.

1.12 Behaviour in the event of an emergency

In an emergency, please immediately press the red EMERGENCY-STOP switch. Have authorised personnel remedy the cause of the fault immediately.

1.13 Declaration of Conformity

CE

FOERSTER

DECLARATION of CONFORMITY

Manufacturer:	INSTITUT DR. FOERSTER GmbH & Co. KG In Laisen 70 72766 Reutlingen GERMANY	Phone +49 7121 140-0 Fax +49 7121 140-488 info@foerstergroup.de www.foerstergroup.de
Responsiblity for documentation:	Dr. Juergen Schroeder	
Product:	CIRCOGRAPH® DS Sensor system Ro 65	
Type:	6.452	
Serial No.:	168 and higher	

We declare, that this product complies with the requirements of following European Directives and corresponding Standards:

- European Directive 2006/42/EC: Safety of machinery
- European Standards EN 12100-1, -2, EN 14121-1, EN 60204-1

- European Directive 2006/95/EC: Safety of electrical apparatus
- European Standard EN 61010-1

- European Directive 2004/108/EC: Electromagnetic Compatibility
- European Standard EN 61326-1

This declaration relates exclusively to the machinery in the state in which it was placed on the market, and excludes components which are added and/or operations carried out subsequently by the final user.

Reutlingen, April 14, 2011

Dr. Juergen Schroeder
General Manager - Division Test Systems

Notes:

2 FUNCTIONAL DESCRIPTION

2.1 Application

Non-destructive testing of ferromagnetic, austenitic and non-ferromagnetic round materials (wires, bars and tubes) for surface flaws in conjunction with the CIRCOGRAPH® DS testing and evaluation electronic equipment and a suitable mechanical handling system.

- Diameter range of test material 5 to 65 mm
- Preferably continuous testing, also separate piece testing
- Surface free of scale, wherever possible bright
- Testing without physical contact at rotational speeds up to 6,000 rpm
- End condition free of projecting burrs
- Max. test material temperature +80 °C
- Test heads with track width 2.5 - 5 - 10 mm [BS]

Testing capacity

- Surface flaw testing, preferably longitudinal flaws
- Flaw detectability for bright material surface from flaw depth of approx. 50 µm
- Testing speed of up to 4 m/s for gapless testing (rotational speed = 6,000 rpm and two test heads with 2x10 mm track width)

2.2 Mode of operation

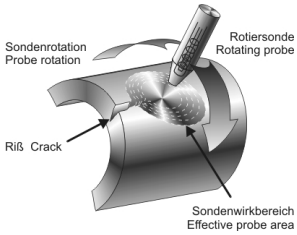

Signal generation during rotary testing

The sensor system operates on the basis of the eddy current principle in accordance with EN 12084. Rotating systems are used to detect longitudinal surface defects. Probes rotate at high speed and without physical contact around the test piece. By feeding the material the probes scan the surface in helical paths.

Due to the locally high resolution of the probes and the transverse movement across the crack by each revolution, this is the most sensitive method for detecting longitudinal defects.

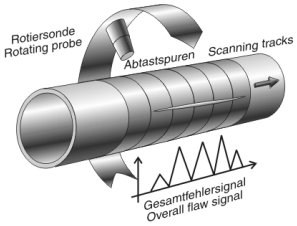

Test tracks and flaw signals of a rotating probe

Any time a probe crosses a crack, it generates a signal. Thus, the rotating system generates a high number of consecutive signals that reliably indicate a flaw of a certain length.

The testing speed is a result of the number of rotating probes, integrated in the rotating head, the track width of all probes, and the rotational speed (rpm). The helical path of all probes must be side by side to guarantee a fully gapless scan.

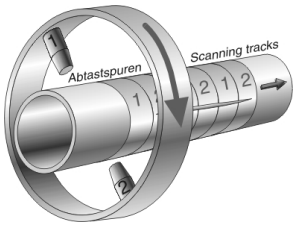

Test tracks of two rotating probes offset by 180°

The signals recorded by the probes are transferred from the sensor system to the test electronics for evaluation.

The primary power supply and the secondary signal of the probes are transmitted by rotating inductive transmitters without physical contact.

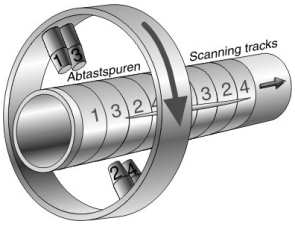

Test tracks of 2x2 rotating probes offset by 90°

2.3 Construction

Fig. 2.1 Test equipment configuration,
top: CIRCOGRAPH DS / MOC SB, bottom: Ro 65 entry side / exit side

CIRCOGRAPH DS test electronics and the connection cables are required for a complete test system, besides the sensor system* which scans the test material and generates the eddy-current signal.

A separate leaflet
“CIRCOGRAPH DS System 6.430", Order-No. 163 852 1
will inform you about the according test electronics.

* *The procedure for selecting a nozzle and for scale setting has changed*

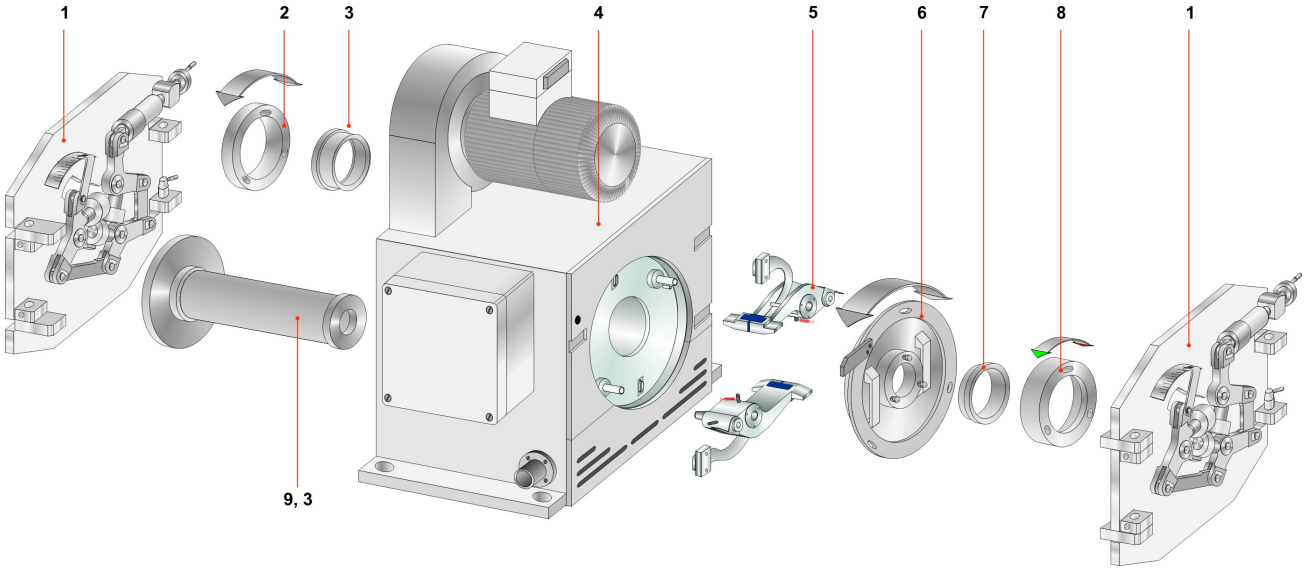

Fig. 2.2 CIRCOGRAPH Sensor system Ro 65, main view, legend ref. to Chp. 2.7

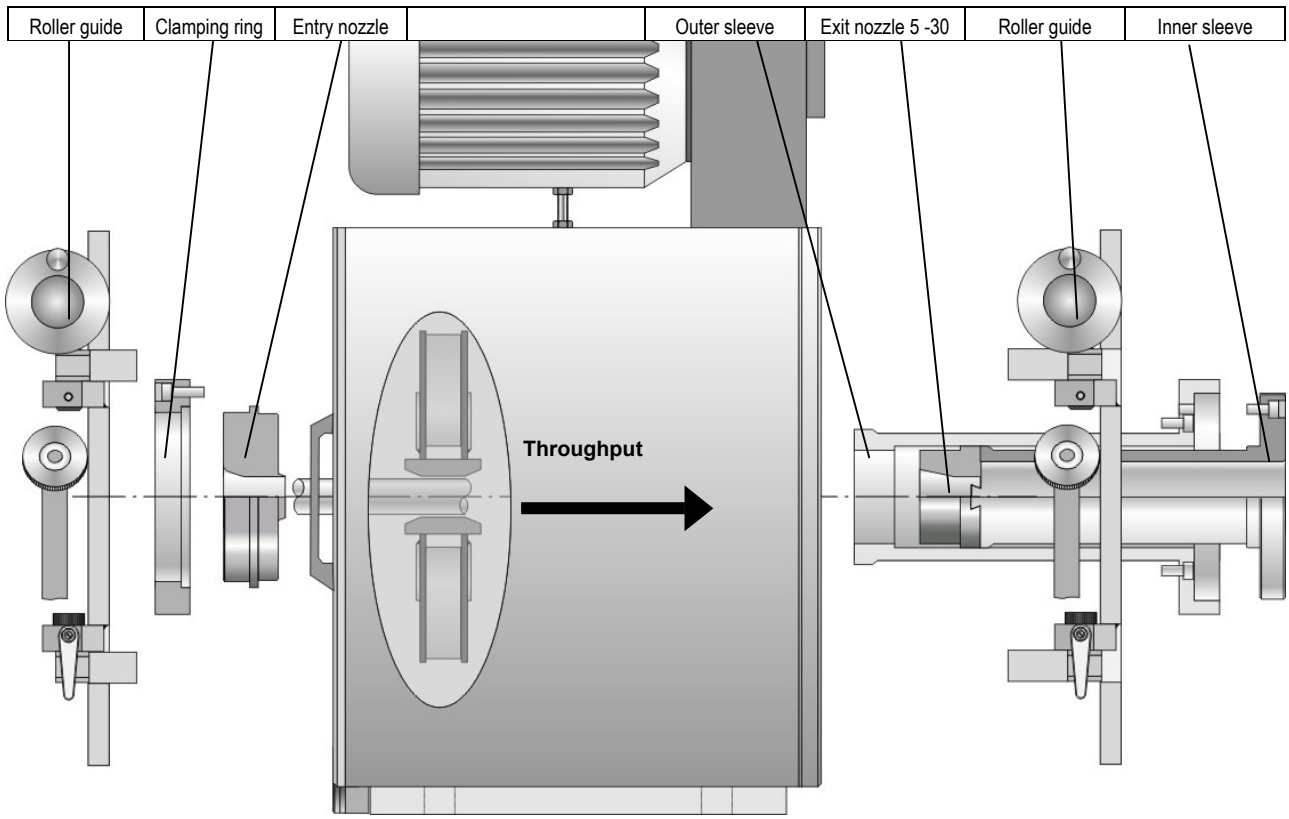

Fig.2.3 CIRCOGRAPH Sensor system Ro 65, basic components

In order to withstand the rough conditions of use, the rotating head has been designed to be dust-protected, robust and reliable by means of complex constructional measures such as labyrinth seals and dirt deflectors.

The chamber surrounding the test zone serves the purpose of contact and burst protection as well as dust collection. This chamber is provided to connect an external extraction system (to be provided by customer).

The sensor system consists of the following compulsory components:

- Rotating head Ro 65
- Test heads
- Protective nozzles

The following options are available for adaptation to particular material conditions:

- Centric triple roller guides
- Nozzle holder and Nozzle Drawing Line
- Nozzle holder and protective nozzles with connector for compressed air (to keep the testing zone free of dust)

2.3.1 Test Heads

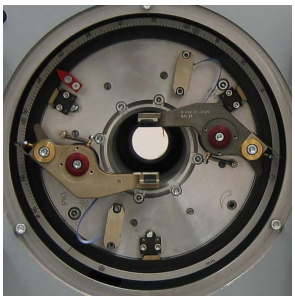

Rotating disc with test heads

The test heads are both the heart of the sensor system and its most critical components.

They consist of an eddy-current probe with field, measuring and clearance windings which are installed in a precise mechanical holder and are connected by means of a highly flexible special cable with a connection plug.

As already mentioned in the ‘Mode of operation’ section, there is a mathematical relationship between the number and track width of the test heads, the rotational speed and the testing speed.

The following table shows these relationships and gives typical examples for a practical selection:

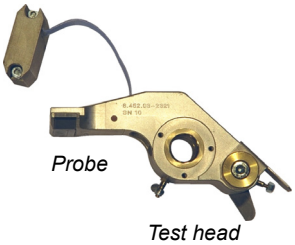

Maximum testing speed	Test head type			Decreasing sensitivity to short flaws
n = 3,000 rpm / n = 6,000 rpm	Number / Track width TH / BS	Bright material Fe - Nfe - Aust	rough rolled Fe	
0.5 m/s / 1.0 m/s	2 TH / 2 x 2.5 mm	6.452.01-2311	6.452.03-2311	↓
1.0 m/s / 2.0 m/s	2 TH / 2 x 5.0 mm	6.452.01-2321	6.452.03-2321	
2.0 m/s / 4.0 m/s	2 TH / 2 x 10 mm	6.452.01-2331	6.452.03-2331	

Tab. 2.1 Test head selection

2.3.2 Rotating Head Ro 65

The rotating head is the main component of the sensor system.
It consists of:

- Rotor
- Transmitter
- Drive
- Housing
- Rotating head electronics

The operating side is to be selected as right or left in the order!

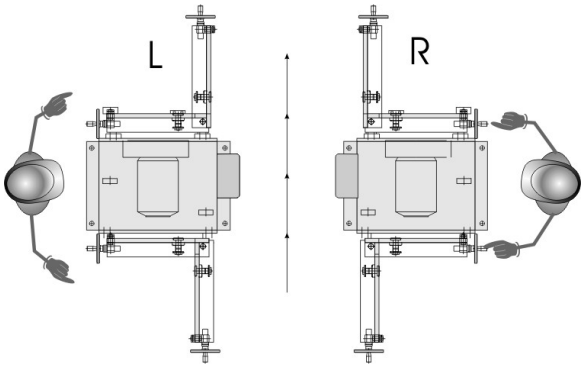

Fig. 2.4 CIRCOGRAPH sensor system Ro 65, operating side left (L) or right (R)

Rotor

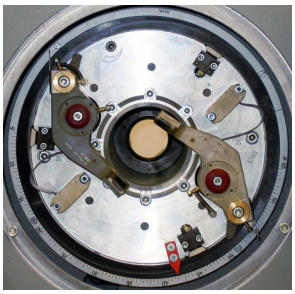

Rotating disc with test heads
left: head in lift off position
right: testing position

The rotor consists of a hollow shaft, a rotor disc and the movable part of the transmitter.

The rotor is driven by the motor by means of a V-ribbed belt. It is supported in the housing by two high-speed bearings.

The high-precision rotating disc for holding the test heads is fitted on the front side.

A pivot-mounted spiral disc with an actuating gear and automatic blocking facility is fitted in the rotating disc for precise and simultaneous test head diameter adjustment.

DANGER!
Never run the rotating head without test heads!
Always use test heads in pairs with the spring in the same position!

Transmitter

Wear-resistant rotating transmitter in disc-type construction with two field transmitters, four measuring channels and a clearance channel.

Consisting of a rotor and stator, it transmits the field current for the rotating probes from the stator to the rotor and, in the opposite direction, transmits the test signal to the test electronics for evaluation.

Rotating head electronics

The rotating head electronics amplifies the probe signals and the field current. It is installed in a robust box on the connection side of the bearing housing to permit ease of maintenance. The cable to the test electronics is connected using MIL plug connectors.

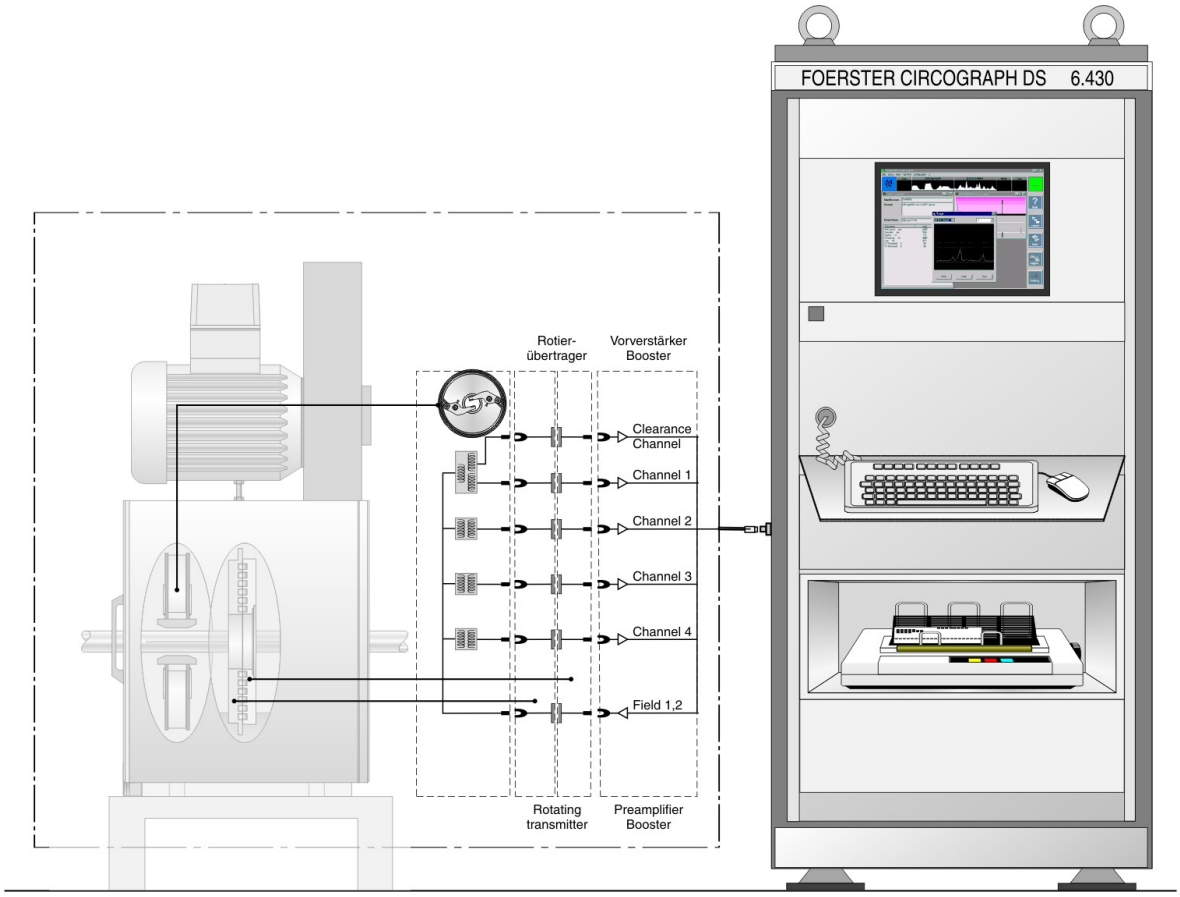

Fig.2.5 Signal path

Drive

Indestructible 3-phase drive with a cage motor in conformance with standards.

External motor control MOC SB for power supply to the drive:

- Rotational speed switchable 3,000 or 6,000 rpm, with electrical breaking.
- Minimized bearing wear through adaptation of rotational speed to test speed
- For applications with changing testing speeds.

The motor control supplies the required voltages and currents and contain the necessary switching and safety devices (contactors, motor protection switches, protective circuits).

The drive motor is connected directly using a Harting plug connector.

Diameter adjustment

Diameter adjustment is carried out manually with a socket wrench. The linear scale is located on the rotor. The scale division of 0.5 mm guarantees an accurate diameter setting.

Protective nozzles standard

They protect the test heads from damage, particularly during entry and exit of the test material, provided that the straightness conditions and the end properties are observed.

Protective nozzles are available in nominal sizes of 5.0 to 67 mm.
They **limit the maximum eccentricity** of the test material within the zone to be tested to a narrow dimension within which the clearance compensation can fully compensate the sensitivity fluctuations.

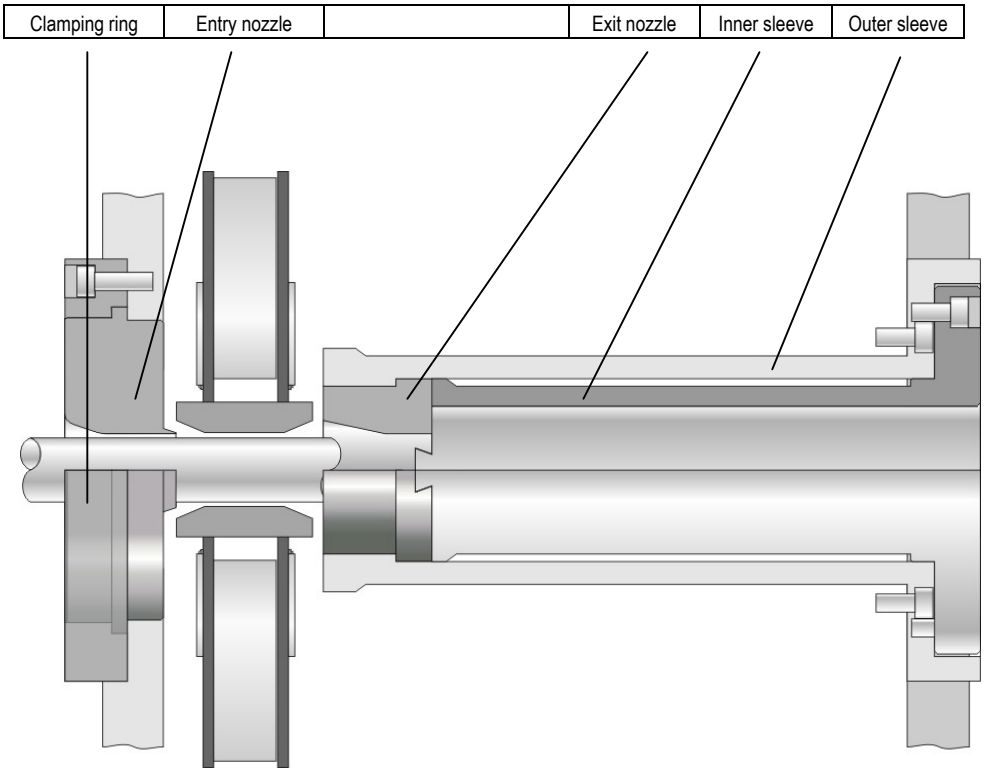

Fig. 2.6 Protective nozzles, main picture NM 5 - 30, nozzle holder with exchangeable nozzle

Entry and exit nozzles must always be used in pairs with the same nominal value.

Protective nozzles can be ordered from INSTITUT DR. FOERSTER or can be manufactured by the customer on the basis of drawings.

WARNING!
Operation without protective nozzles is not permitted for damage and safety reasons.

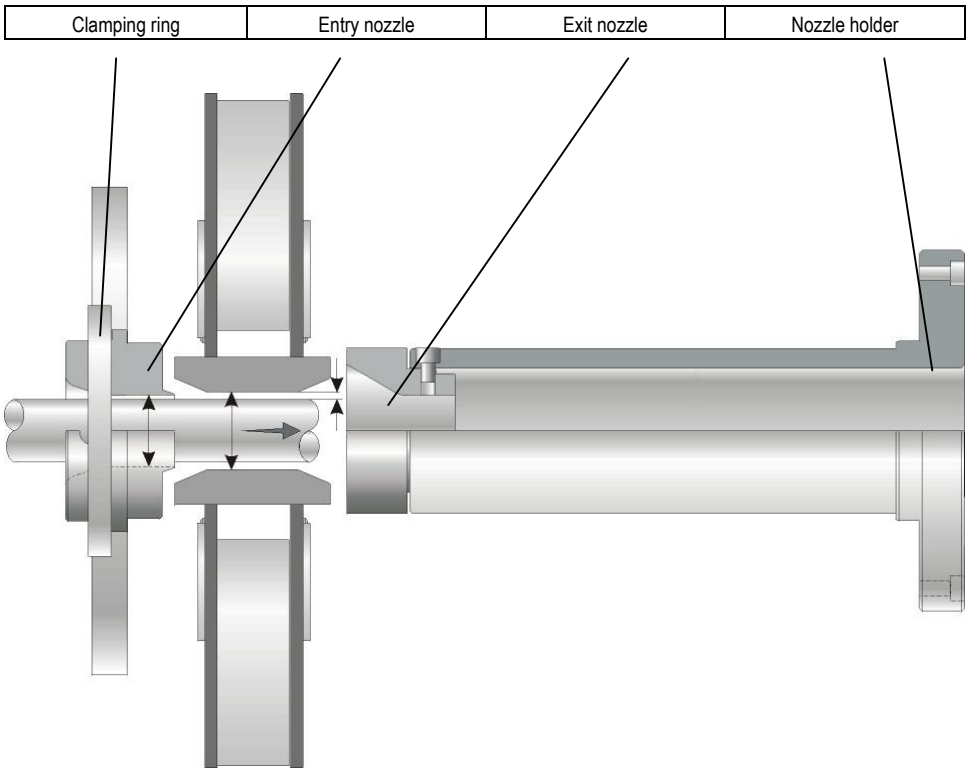

Fig.2.7 Protective nozzles, drawing machine, main picture, test heads and exchangeable nozzles

Roller guide

The centric roller guides have two advantages:

In set-up mode, a calibration piece with reference flaws can be held centrically outside the testing section and the test electronics can be adjusted simply, since the rotating probes periodically scan the test flaw and display the signal quasi-statically.
For setting of clearance compensation there is no need to hold the calibration piece centrically.

In testing mode, the roller guides improve centricity, especially for smaller dimensions, and damp vibrations. They are always required if the drivers for material transport cannot be set up directly in front of and behind the sensor system.

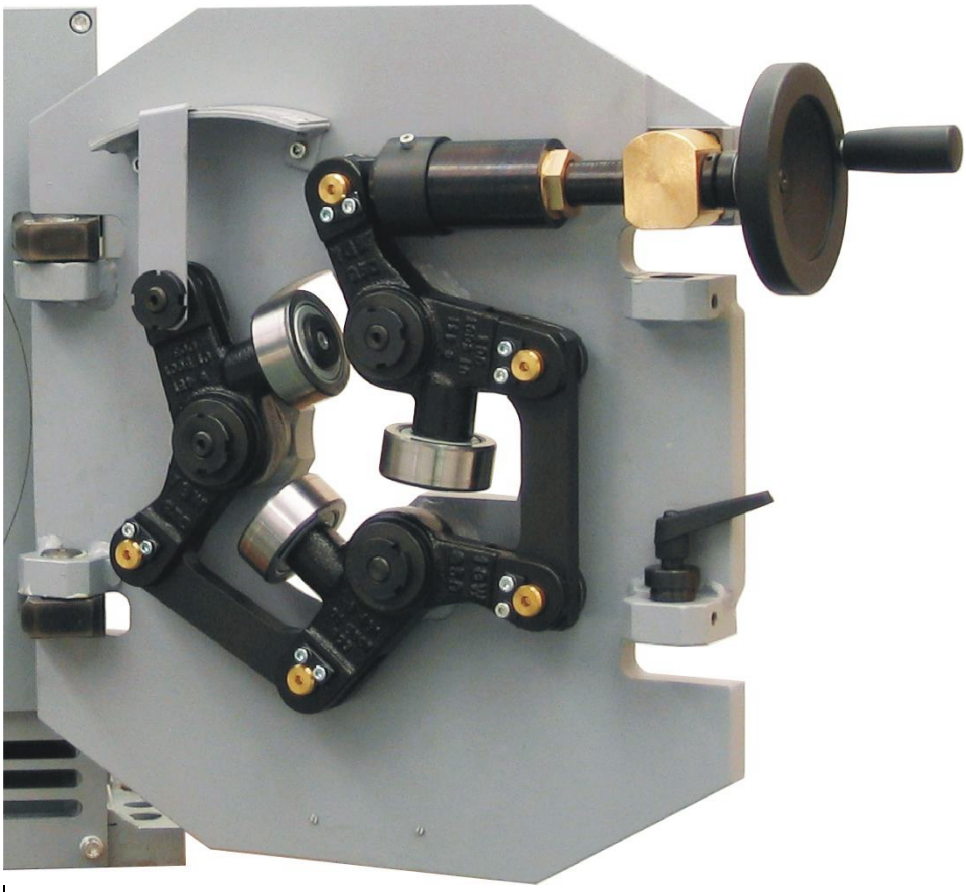

Fig.2.8 Roller guide

2.4 Technical Data

Diameter range test material	continuously adjustable 5 to 65 mm
Rotational speed MOC SB motor control	3,000 or 6,000 rpm **S**witchable with. **B**rake
Deceleration times from without braking with braking	6,000 rpm approx. 360 sec approx. 30 sec
Type of test	preferable without physical contact
Test heads (TH) two probes each	two TH offset by 180° adjustable according to a scale
Probe track width of TH	2x2.5 mm, 2x5 and 2x10 mm
Testing speed for gapless testing (2x5 mm track width)	v_{max} _ for 2 TH rpm = 3,000 1 m/s rpm = 6,000 2 m/s
Dimensions	see dimension sheet
Weight	approximately 220 kg
Drive Three-phase motor	n_o = 1.420 rpm P = 1,4 kW n_o = 2.830 rpm P = 1,8 kW
Power supply	Rotary current 3x400 V (adaptable via isolating transformer)
Useful bearing life (depending on operating conditions)	operating hours typically at approx. 7.000 h 3,000 rpm approx. 5.000 h 6,000 rpm
Centric roller guide (option)	Ø 5 to 65 mm
Weight	approx. 70 kg
Dimensions	see dimension sheet

2.5 Dimension sheet

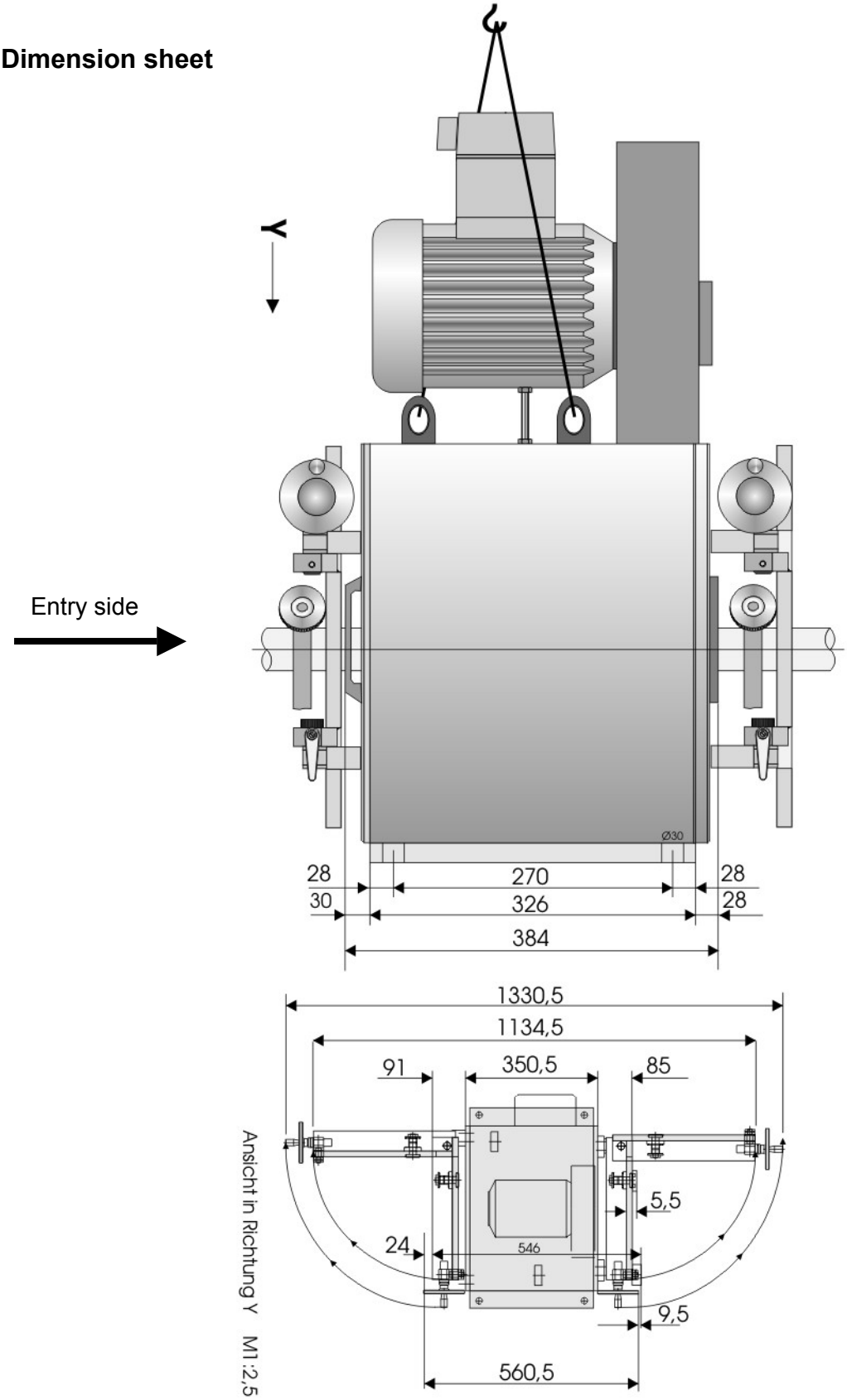

Fig. 2.9 Dimension sheet I

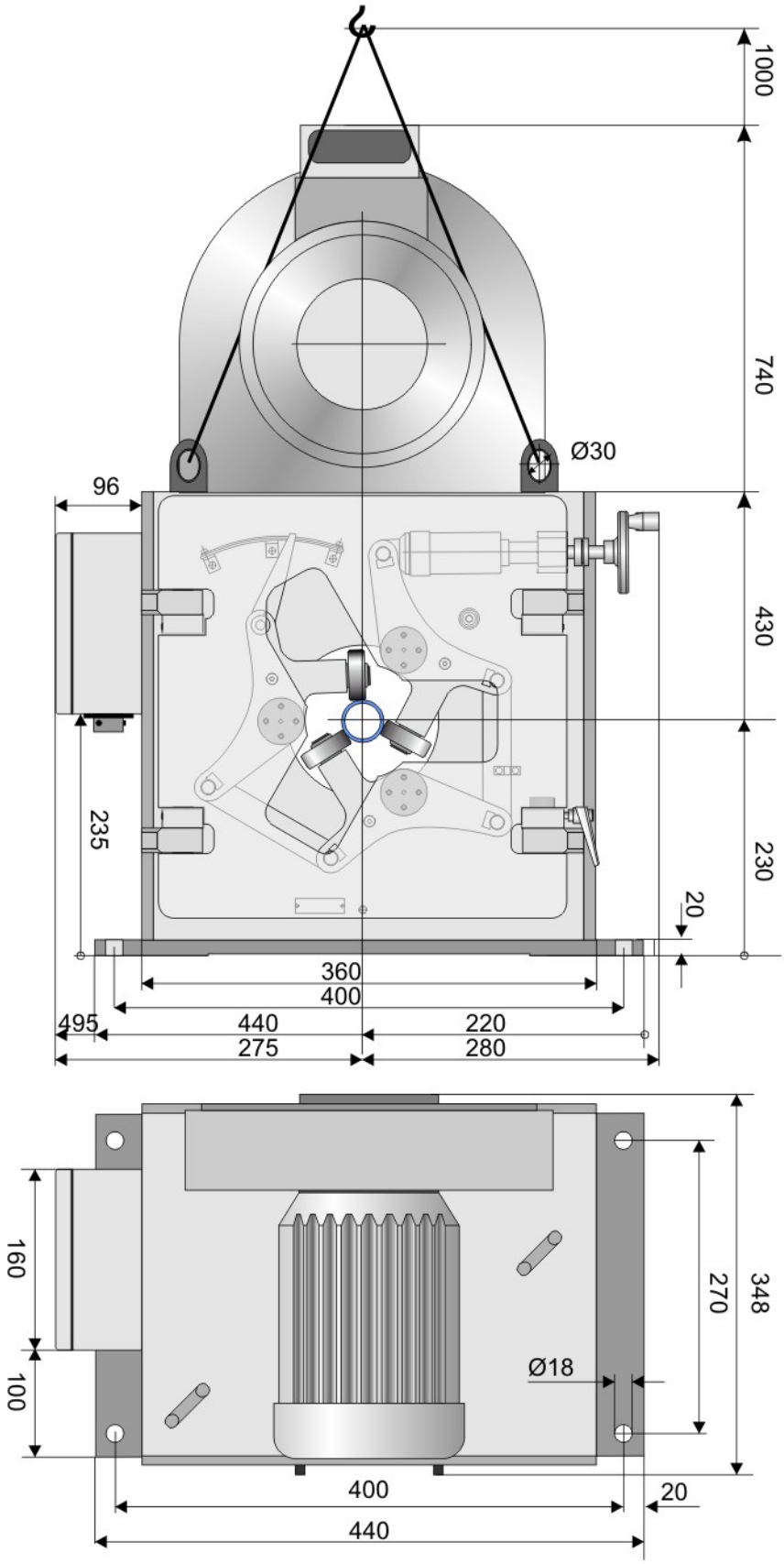

Fig. 2.10 Dimension sheet 2

2.6 Environmental conditions

Operation

Temperature range	
sensor	+5° C to +80° C
rotating system	+5° C to +45° C
Relative humidity	
test head	95 %, casually condensation permissible
rotating system	85 %, condensation not permissible
Degree of protection	EN (60 529)
test head	IP 65
rotating system	IP 43

Storage and transport

Storage, transport and handling may be carried out in original packaging only. The packages must be protected from moisture.

Observe instructions on the packaging (e.g. fragile, store in a dry place, this way up, etc.)

Storage conditions

- storage in unopened original packaging
- in closed rooms
- temperature range -20° C to +70° C
- max. relative humidity 95 %, condensation not permissible
- maximum storage duration approx. 12 months (extension possible after intermediate check by FOERSTER employee)

Emissions

The A-weighted sound pressure level at intervals of 1 m from the machine's surface and at 1.60 m height is for maximum rotational speed 6,000 rpm on exit side:

inside testing section : without material 85 dB(A), with material 84 dB(A)
outside testing section : without material 92 dB(A), with material 88 dB(A)

On the operator's workstations the values are smaller in the case of greater distances.

2.7 Standard Components

Legend No	Part name	Part-No	Order-No
4	Rotating head Ro 65	6.452.01-1301	**1656660**
	Test cable DS 10M, CIRCOGRAPH-DS	6.460.01-9921	**1650785**
	Motor cable 10M	6.460.01-9931	**1638343**
	Grounding cable 10M	6.460.01-9911	**1588818**
5	Test head N, BS=2 x 2.5	6.452.01.2311	**1447017**
	Test head N, BS=2 x 5	6.452.01-2321	**1447025**
	Test head N, BS=2 x 10	6.452.01-2331	**1447033**
	Test head, BS=2 x 2.5	6.452.03.2311	**1811096**
	Test head, BS=2 x 5	6.452.03-2321	**1664514**
	Test head, BS=2 x 10	6.452.03-2331	**1664522**
9	Nozzle holder exit	6.452.01-1001-50	**1253158**
9.1	Inner sleeve	6.452.01-1001-5002	**1254421**
9.2	Outer sleeve	6.452.01-1001-5001	**1254430**
2	Clamping ring exit	6.452.01-1001-0006	**1253751**
6	Housing flange	6.452.01-1001-0001	**1253166**
8	Clamping ring entry	6.452.01-1001-0003	**1253182**
3	Nozzle exit *	6.452.01-3221	**1377337**
7	Nozzle, entry *	6.452.01-3211	**1377329**
	Nozzle holder Robust exit	6.452.01-5901-20	**1498100**
	Nozzle robust exit *	6.452.01-3222	**1590723**
	Nozzle robust entry *	6.452.01-3212	**1590715**
1	Roller guide Ro 30/65	6.451.01-5001	**1290827**
	Set of tools Ro 65	6.452.01-9211	**1291106**
	Motor control, MOC SB	6.430.01-3040	**1638289**
	Operating instructions, German SENSORSYSTEM Ro 65	6.452 UA06/DE	**1826867**
	Operating instructions English, SENSORSYSTEM Ro 65	6.452 UA06/EN	**1826891**

* Nominal diameter to be mentioned on ordering!

Notes:

3 INSTALLATION

3.1 Setup and Connection

NOTE!
The sensor system must be mounted on a horizontally shiftable lifting table in order to be able to change the dimensions or to carry out service work outside of the testing section.

Requirements of the lifting table:

- It must be designed accordingly for the weight and function of the sensor system
  - adequate load-bearing capacity
  - low-vibration design
  - able to be fixed in test position
- With precise vertical adjustment facility
- Able to be withdrawn from the test position to service position and able to be removed reproducibly back; withdrawing travel at least 700 mm
- The mounting surface for the sensor system must be completely horizontal at every elevation (this must be checked with a precision spirit level)
- Cable skid for protecting the cables against damage when traversing the lifting table

The two horizontal end positions of the lifting table (service position/test position) should each be monitored with a limit switch. The limit switches must be gated with the roller conveyor control system in such a way that the roller conveyor can be switched on only if the table is fixed on one of the end positions. In addition, it must be ensured that the table can be moved out and in or vertically adjusted only if the roller conveyor is switched off and no test material inside.

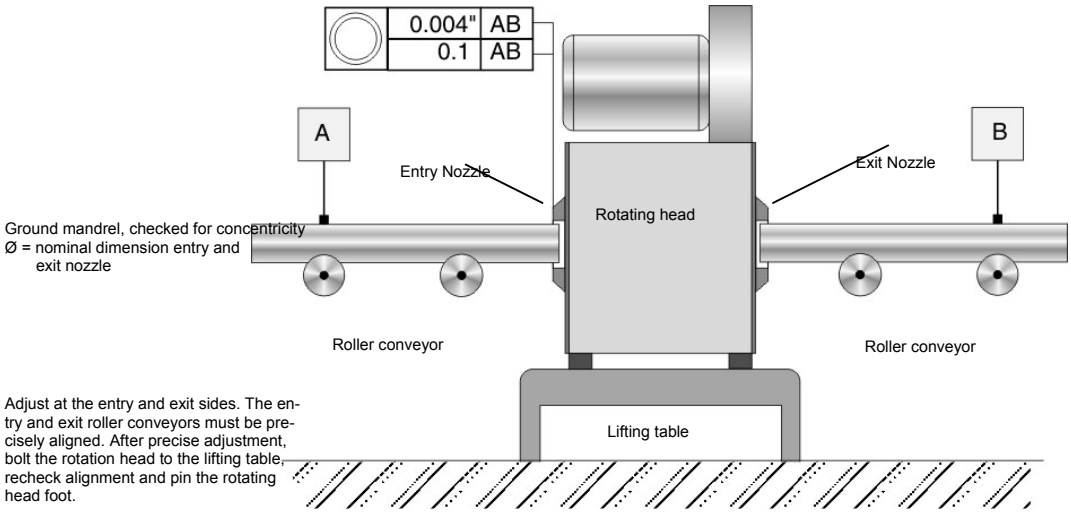

Fig. 3.1 Aligning the sensor system on the lifting table

Electrical connections

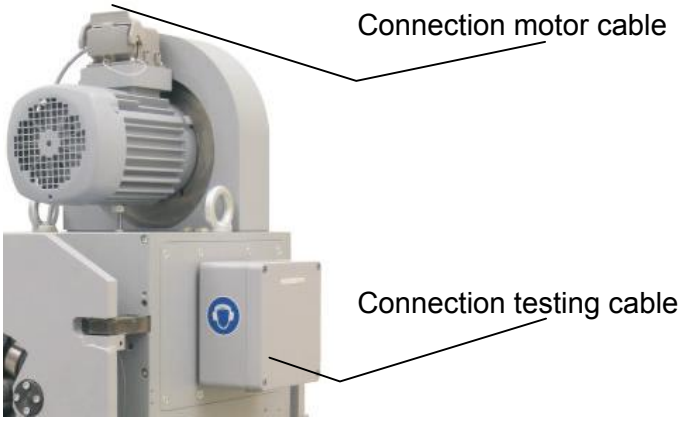

Fig. 3.2 Rotating head, connections

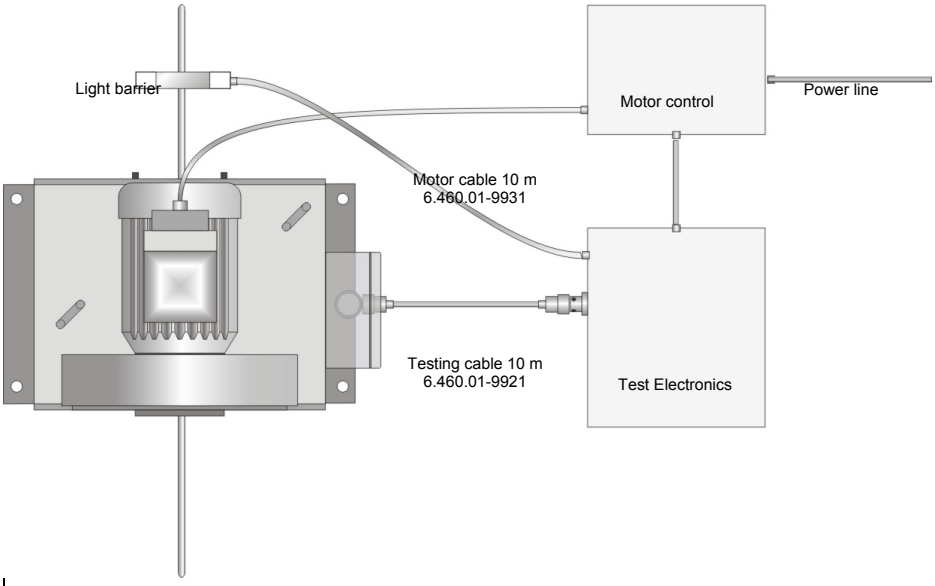

Fig. 3.3 Connection 2-channel rotating head to CIRCOGRAPH DS

NOTE!
Protective conductor connection (PE)
according to EN 61010 (VDE 0411)
Connect the protective conductor terminal of the electronic cabinet and the other system components, e. g. control cabinets, motor control, rotating heads with the next main protective conductor terminal 16 mm^2.
A green/yellow lead with 16 mm^2 Cu is to be used for that.

4 OPERATION

4.1 Dimension change

The following steps must be carried out during conversion:

I Set test head to new nominal value of test material

II Insert suitable protective nozzles

III Set roller guides to test diameter

IV Centre sensor system in the testing section

Preparation

- Select protective nozzles for new test piece measurement.
- Prepare tools for dimension change.

WARNING!
Risk of injury!
Do not intervene manually in the sensor system when the rotating unit is running!
Switch off drive before carrying out any work!
Wait for machine standstill!
Deceleration times from max. rotational speed 6,000 rpm: approx. 360 seconds (with manual braking).

Dimension change procedure

- Switch off sensor system drive.
- Move sensor system out of the testing section.
- Open both roller guides.
- Remove entry and exit nozzle.
- Clean nozzle mount carefully.
- Adjust test heads to new nominal diameter of the protective nozzles.
- Install nozzles.
- Check setting (observe smooth running of rotor).

- Move rotating head into testing section.
- Insert test material.

4.2 Selection and installation of the protective nozzles

4.2.1 Selection of the protective nozzles

Function of the protective nozzles

- Guarantee protection from damage during entry, even for test pieces with larger diameters, impermissible curvatures or deformed fronts or ends.
- In addition during operation without roller guides: guide the test material with low eccentricity.

Recommendations to figure the nozzle diameter for obtaining good test results are given on the basis of empirical values, depending upon test material diameter:

Test results			
Test material *D*iameter D mm	Protective Nozzles Diameter DD [mm]		
	optimal	normal	limited
5.0 - 5.9	D + 0.1	D + 0.2	D + 0.5
> 5.9 – 6.9	D + 0.2	D + 0.3	
> 6.9 – 7.6	D + 0.3	D + 0.4	
> 7.6 – 14.0	D + 0.3	D + 0.5	D + 1.0
> 14.0 – 30.0	D + 0.5	D + 1.0	D + 1.5
> 30.0 – 65.0	D + 0.7	D + 1.5	D + 2.0

Tab. 4.1 Standard protective nozzle

The protective nozzles can be selected more precisely depending on the test diameter if the quality of guidance is sufficiently precise. This can improve the test results.

Test heads with highest local flaw resolution, should be used with adapted protective nozzles

Test heads with standard flaw resolution to be used with drawing bench or with increased curvature of test piece.

		BS *
6.452.01-2311	6.452.03-2311	2 x 2.5 mm
6.452.01-2321	6.452.03-2321	2 x 5.0 mm
6.452.01-2331	6.452.03-2331	2 x 10 mm

* BS = track width

4.2.2 Required tools

Usage	Tool	Order-No
Nozzle exchange and diameter setting	■ Hexagon screwdriver, warped a/f 2,5 mm (extended)	**012 558 0**
	■ Hexagon screwdriver, warped a/f 3 mm (extended)	**012 559 8**
	■ Hexagon screwdriver, warped a/f 4 mm (extended)	**012 560 1**
	■ Hexagon screwdriver, warped a/f 5 mm (extended)	**012 561 0**
Maintenance	■ Hexagon screwdriver, warped a/f 6 mm (extended)	**012 562 8**
	■ Hexagon screwdriver, warped a/f 8 mm (extended)	**012 563 6**
	■ Hexagon screwdriver, warped a/f 4 mm (with pin)	**016 549 2**
	■ Hexagon screwdriver, straight a/f 5 x 100 mm, T-handle	**014 002 3**
	■ Socket wrench a/f 5.5 with hexagonal flange	**012 555 5**
	■ 2 x hexagon socket screw DIN 912 M5x50-8.8 (zinc)	**014 798 2**
	■ Pin wrench 6.452.01.9211-01	**137 783 3**
	■ Pin drawer	**137 215 7**
	■ Pressing pin 6.452.01.9211-0001	**137 216 5**
	■ Support plate 6.452.01.9211-0003	**138 367 1**

4.3 Adjusting nominal diameter

4.3.1 Preparation

- Select protective nozzles according to Chapter 4.2.
- Switch off drive and wait for standstill.
- Move test material out of the sensor system.
- Move sensor system out of the testing section.

Opening the roller guides

- Turn the locking bolt in ccw direction up to the stop.
- Swivel out the roller guide.

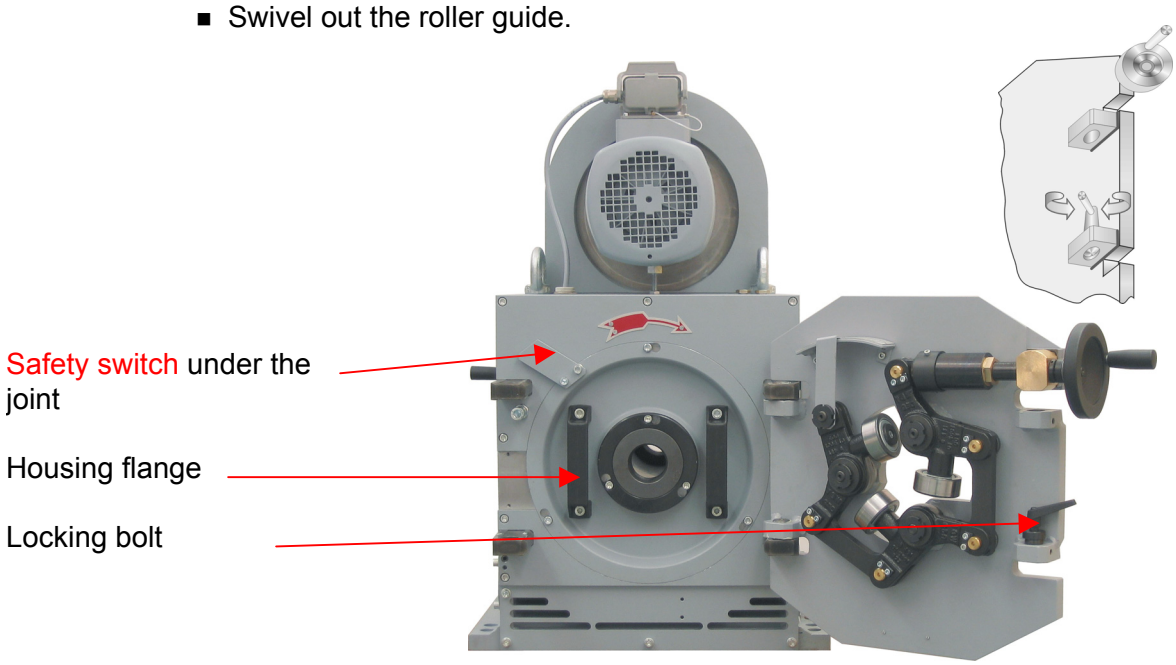

Fig. 4.1 Entry side with housing flange

WARNING!
For safety reasons, a safety switch interrupts the power supply of the drive as soon as the door of the drive cover is opened.
Do not change the function of the safety switch under any circumstances!

4.3.2 Removing Entry Nozzle

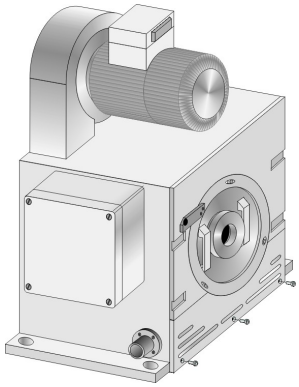

- Unscrew three Allen screws M 6 x 22 DIN 912 (A).
- Open and remove the clamping ring (8).
- Remove the nozzle (7) out of the housing flange (6).

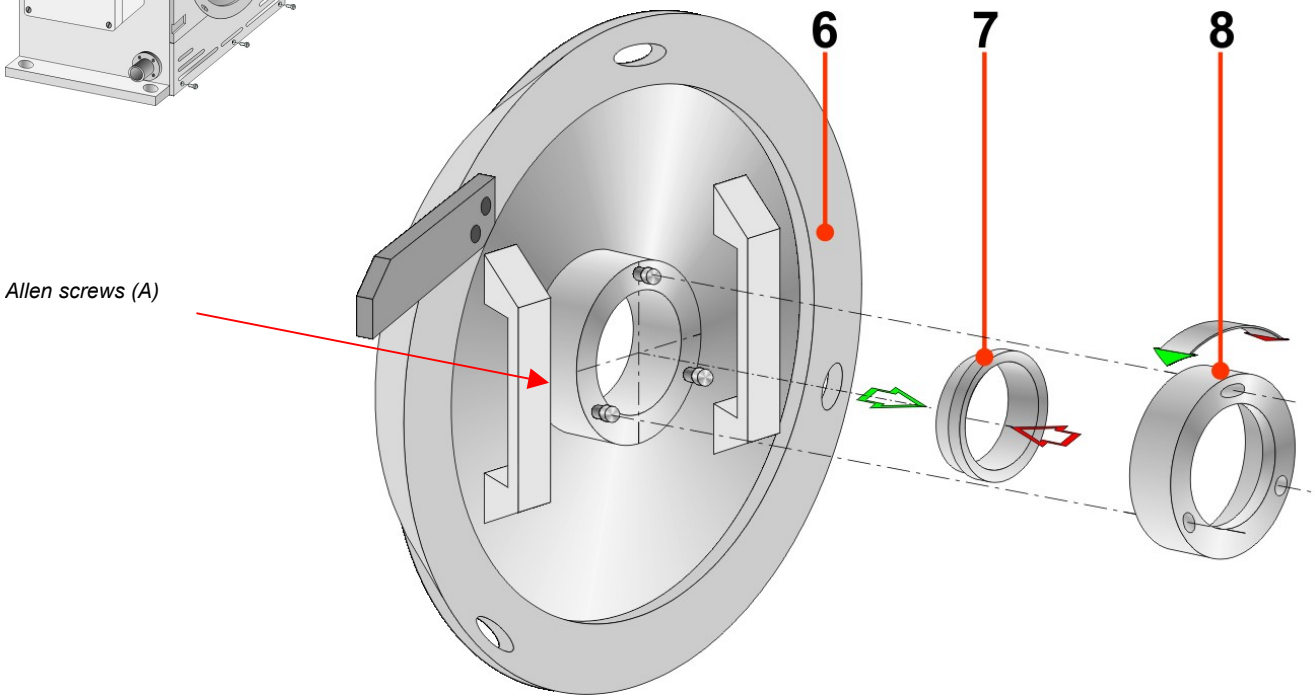

Fig.4.2 Changing the entry nozzles, legend ref. to Chapter 2.7

4.3.3 Adjusting nominal diameter

Housing flange

- Unscrew three Allen screws M 6 x 10 DIN 912 (C).
- Turn ccw and remove housing flange.

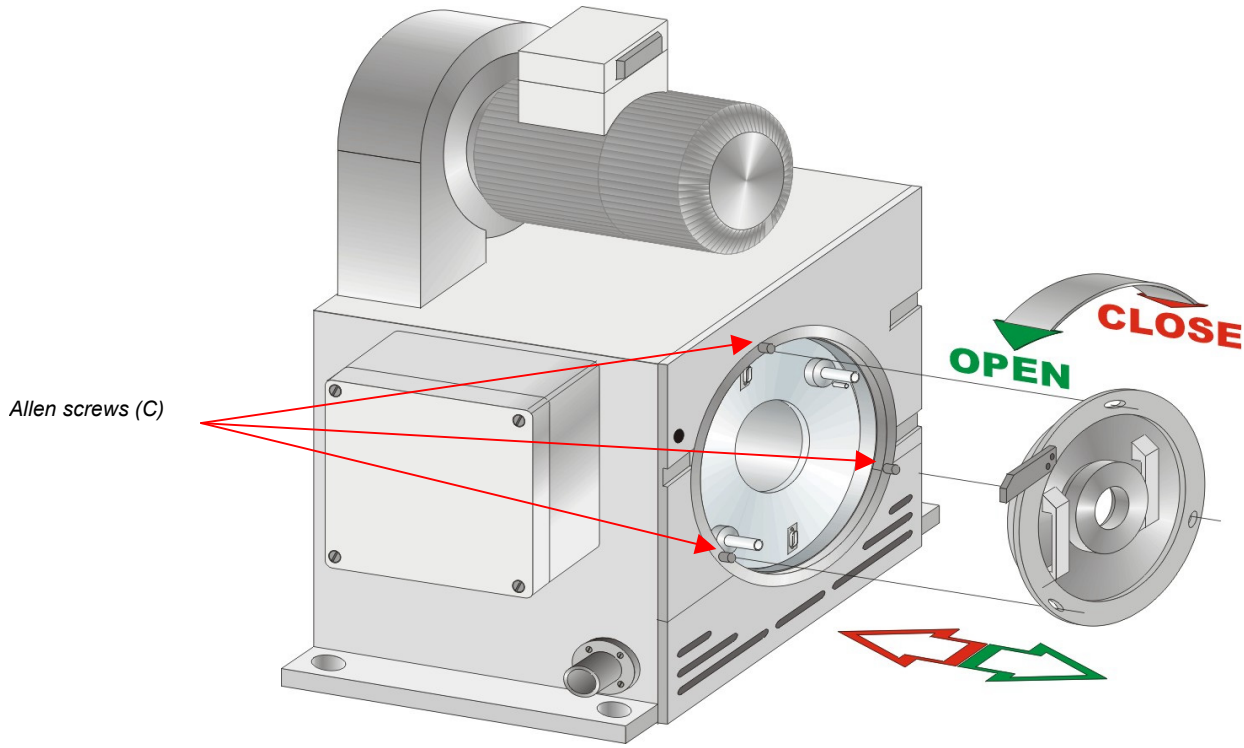

Fig. 4.3 Housing flange

NOTE!
Mass housing flange approx. 7 kg!

Recommended settings

Test heads according the opposite table are set to the test piece nominal diameter with respect to the selected nozzle. For selection refer to: 4.2.1 Selection of the protective nozzles

bright material Fe - Nfe - Aust	raw from rolling Fe	track width BS
6.452.01-2311	6.452.03-2311	2 x 2.5 mm
6.452.01-2321	6.452.03-2321	2 x 5.0 mm
6.452.01-2331	6.452.03-2331	2 x 10 mm

While considering this setup recommendations a sufficient probe protection (**A_{PK} - A**) of minimum 0.2 mm is given.

Nozzle diameter DD [mm]	Scale
5 up to 16.9	DD – 1,4
≥ 16.9 up to 67	DD – 2,6

With worse testing conditions, e.g. drawing line with bented ends or reduced guidance quality, a higher probe protection is given with that scale setting:

Nozzle diameter DD [mm]	Scale
5 up to 65	DD

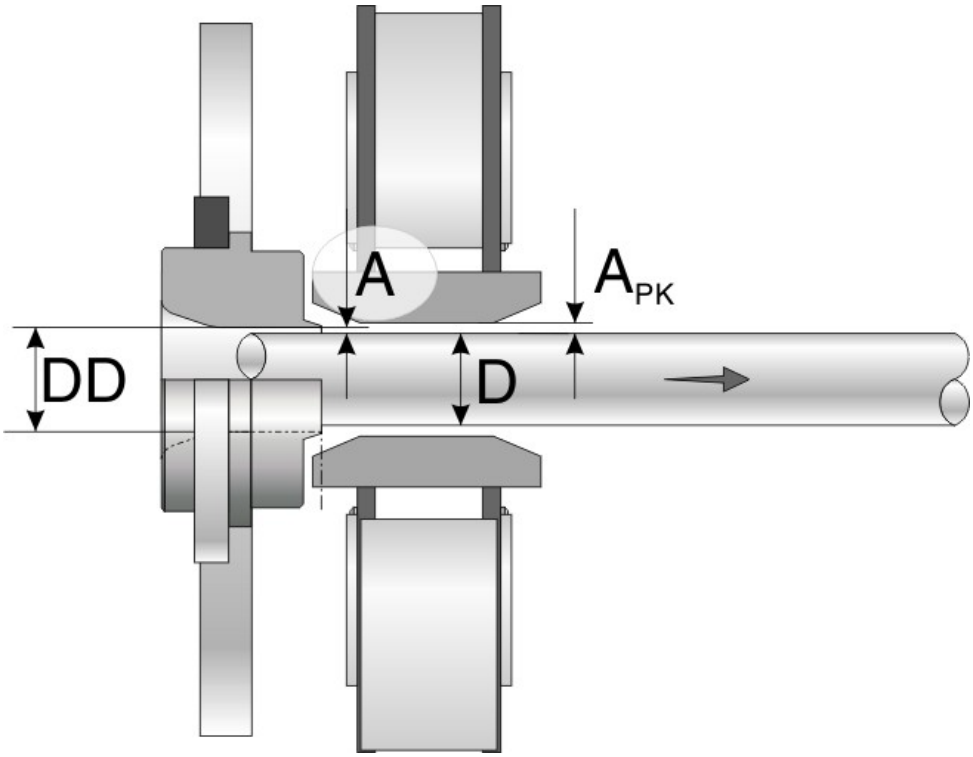

Fig. 4.4 Definition of the settings on the test head

Diameter setting

WARNING!
Do not adjust the nominal diameter to values higher than 65 mm! Overwinding can snap off the test heads from the cam disk and test heads will be clamped when reverse winding!

- Untighten two clamping screws (C), approx. ½ turn.
- Adjust probe lever to the new nominal diameter with hexagon screw-driver a/f 5 according to the scale.
- Tighten two clamping screws (C), approx. ½ turn.

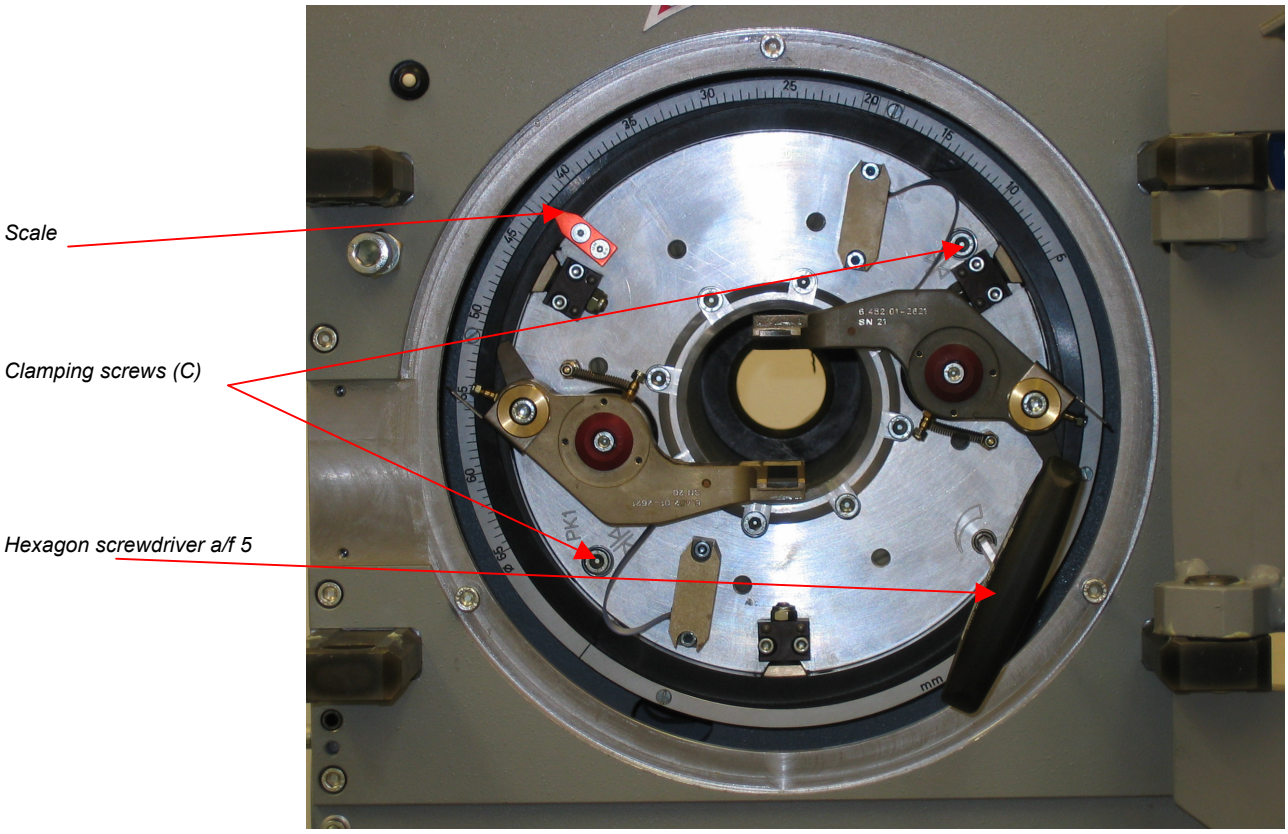

Fig. 4.5 Diameter setting

Fit the housing flange

- Fit the housing flange with bayonet by turning cw.
- Tighten three Allen screws M 6 x 10 DIN 912 (B) with 6 Nm.

Remove exit nozzles

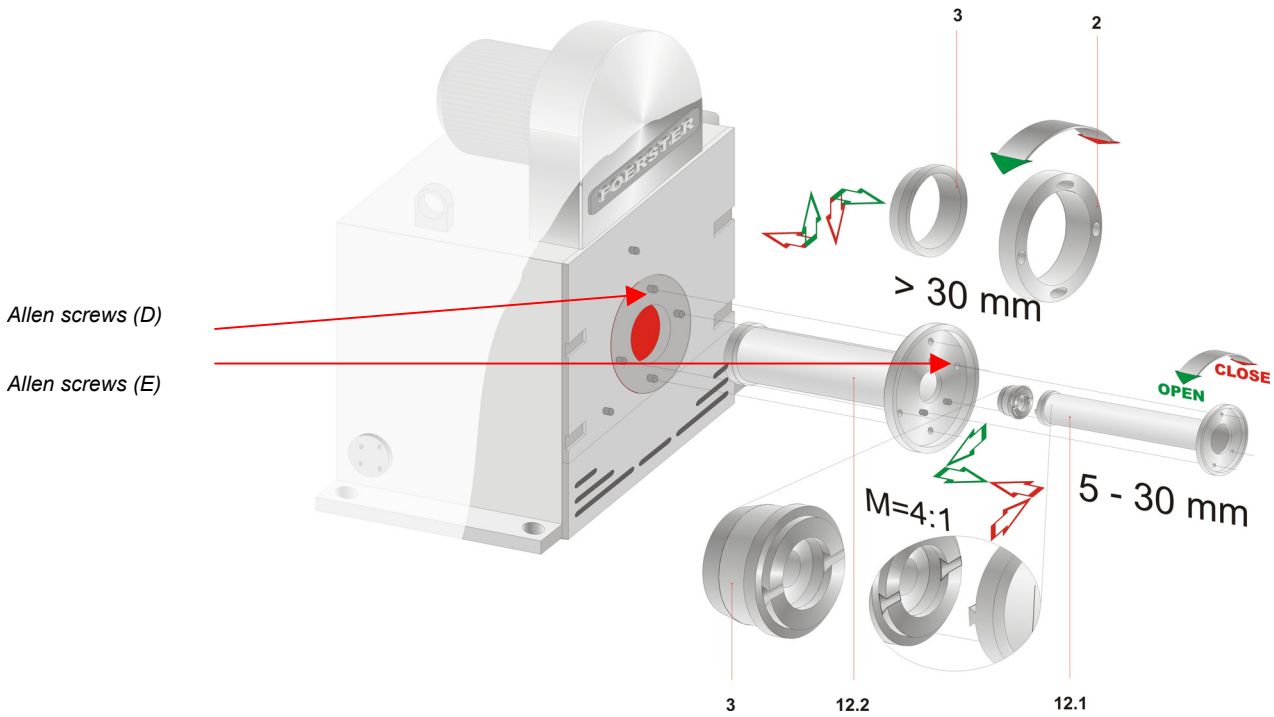

Fig.4.6 Nozzle changing exit side, legend see Chapter 2.7

Nozzle 5 - 30 mm

- Untighten three Allen screws M 6 x 16 DIN 912 (E).
- Remove inner sleeve (12.1) with exit nozzle fitted (3) from outer sleeve (12.2).

NOTE!
Outer sleeve (12.2) remains fitted!

- Remove exit nozzle (3) with dovetail from inner sleeve (12.1).

Nozzle > 30 mm

- Untighten four Allen screws M 6 x 20 DIN 912 (D).
- Remove clamping ring exit (2) and pull out exit nozzle (3).

NOTE!
Outer sleeve (12.2) and inner sleeve (12.1) not needed.

4.3.4 Fitting protective nozzles

- Select nozzles according to Chapter. 4.2.1.

NOTE!
Clean all parts before fitting them carefully!
Check for wear each time before using them!
Do not use worn nozzles!
Use only nozzle pairs with the same nominal diameter!

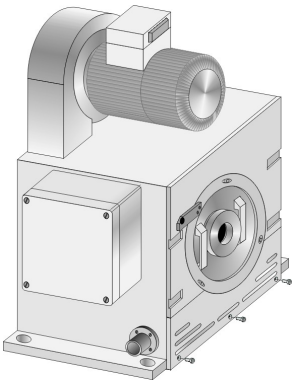

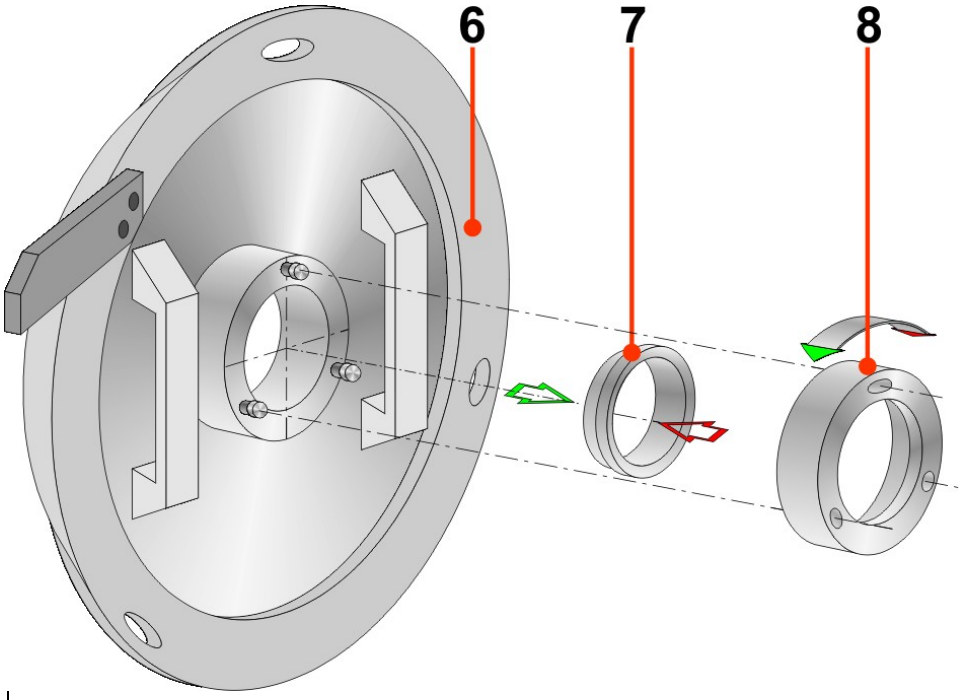

Fig. 4.7 Fitting nozzles entry side, legend see Chapter 2.7

WARNING!
Adjust the test heads to the nominal diameter of the protective nozzles before inserting the nozzle!
Inserting the nozzle into a test head arrangement that is too narrow can cause damage to the test heads and/or nozzles.

Entry nozzle 5 - 67 mm

- Fit the entry nozzle (7) into the inserted adapter (6) by turning it.
- Fit the clamping ring entry (8).
- Tighten three Allen screws M 6 x 22 DIN 912 with 6 Nm (A).

Exit nozzle 5 - 30 mm

NOTE!
The outer sleeve (12.2) is already in place.

- Fit the exit nozzle (3) onto the dovetail guide of the inner sleeve(12.1).
- Insert the inner sleeve(12.1) with exit nozzle (3) fitted into the outer sleeve (12.2).
- Tighten three Allen screws M 6 x 16 DIN 912 with 6 Nm (E).

Exit nozzle > 30 mm

NOTE!
The outer sleeve (12.2) is **not** in place.

- Fit the exit nozzle (3) into the faceplate by turning it and fit the clamping ring exit (2).
- Tighten four Allen screws M 6 x 20 DIN 912 with 6 Nm (D).

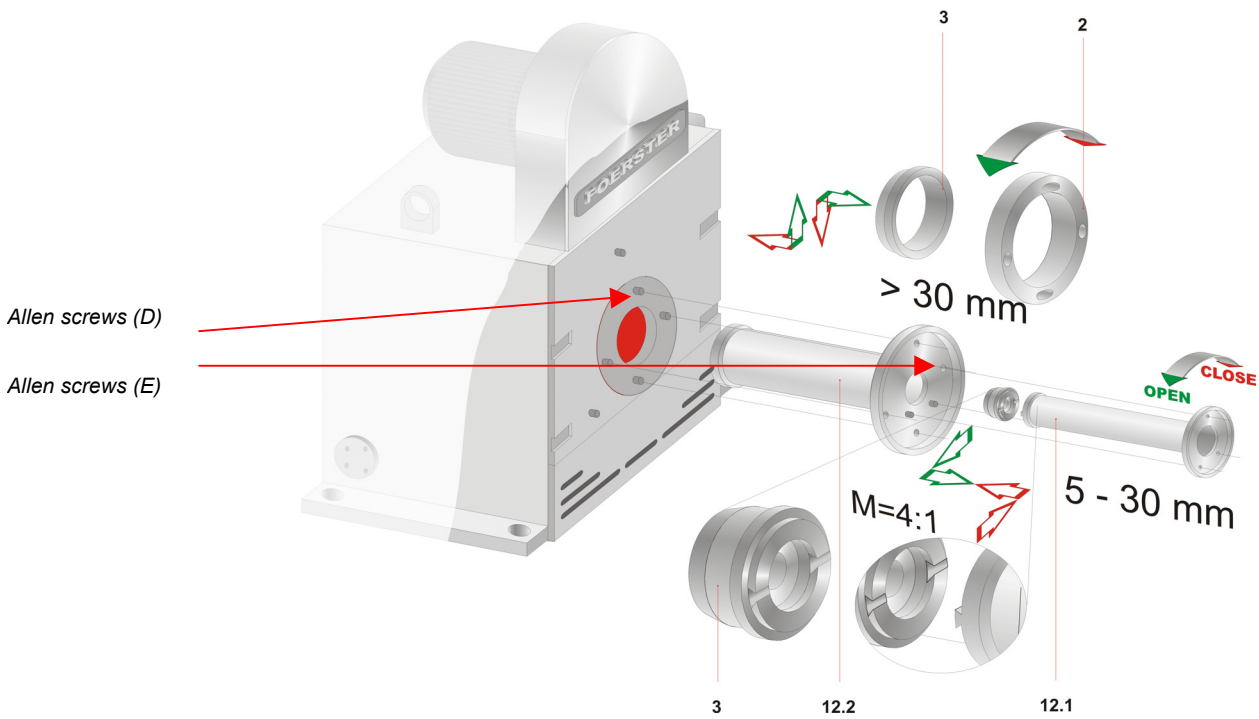

Fig.4.8 Fitting nozzles exit side, legend see Chapter 2.7

4.3.5 Setting the roller guides

- Set the roller guide coarsely to the nominal diameter in accordance with the scale (in the case of new track rollers, the clear diameter of the track rollers corresponds exactly to the scale setting).

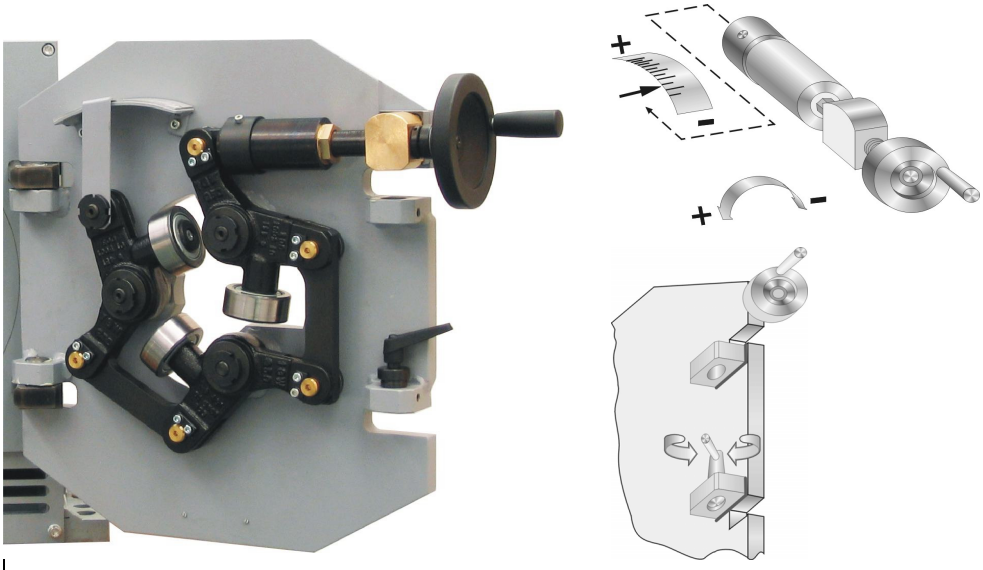

Fig. 4.9 Setting the roller guides

- Swivel in the roller guide, turn the locking bolt in cw direction up to the stop.
- If required, set track roller approx. 0.4 to 1.0 mm closer in diameter (rotating by 40° , max 100° at the hand wheel).

NOTE!
A lower pretension of the track rollers protect both the test material and track rollers. A higher pretension improves the quality of guidance.

4.3.6 Positioning the sensor system in the testing section

- Move the lifting table back into the testing section and lock it.
- Adjust the table to the height of the testing axis and lock it.

NOTE!
The test piece must run centrically through the sensor system!

4.4 Rotational speed preselection

- MOC SB motor control

Rotational speed switchable 3,000 or 6,000 rpm

The motor control supplies the required voltages and currents and contain the necessary switching and safety devices (contactors, motor protection switches, protective circuits).

Achievable throughput speeds

Speed	v [m/s] with test head track width		
rpm	2 x 2.5 mm	2 x 5 mm	2 x 10 mm
3,000	0.5	1.0	2.0
6,000	1.0	2.0	4.0

Tab. 4.2 Achievable throughput speeds

4.5 Switching on motor

NOTE!
Check the diameter and height settings of the sensor system before switching on.

The operating elements used to switch on the rotating head drive are located on the motor control.
The motor control is installed in a separate housing.

Acceleration times:	approx. 4 sec (3,000) rpm approx. 10 sec (6,000) rpm
Deceleration times without braking:	approx. 210 sec (3,000) rpm approx. 360 sec (6,000) rpm
Deceleration times with braking:	approx. 15 sec (3,000) rpm approx. 30 sec (6,000) rpm

The rotating head must run quietly and without loud noises when no test material is present.

Whistling noises when starting or braking indicate that the V-ribbed belt needs to be retensioned.

NOTE!
Switch off the drive immediately if grinding noises are heard.

Possible causes:
Incorrect nozzles inserted
Nozzle or holders not securely fitted
Nozzle not fitted in end position

4.6 Application drawing line

Function

- Protection of the test heads against unacceptable test material conditions. In particular, during entry and exit of drawing point or deformed nose or tail.
- Limitation of the deviation of the test material with respect to the rotating head axis.
- Guidance of test head when using floating table.

NOTE!
Only use with test head 6.452.03-2321!

If necessary test heads may be pretensioned by a spring to achieve wide opening, when the motor is switched off for feeding the test material in and out.

Dimension change - definitions

Position of the test heads, testing without physical contact and with excellent centering of the test material. Normal setting for correct diameter setting and correct nominal diameter of protective nozzle; A < APK. Test head behind the protective nozzle.

Auxiliary nozzle for installation without straghtening roller device

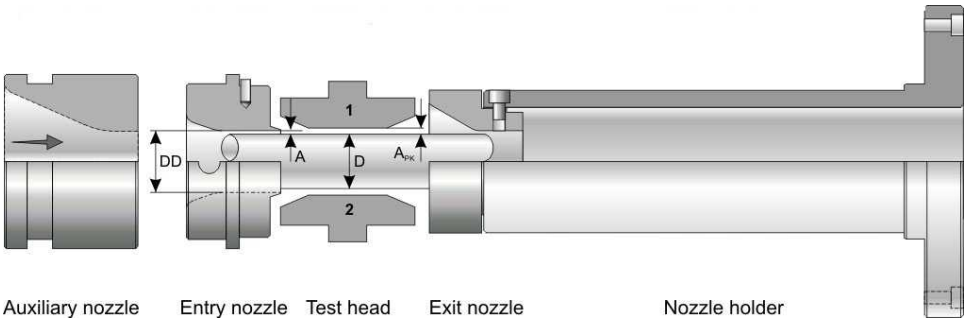

Fig. 4.10

D	*Test piece nominal diameter*
APK	*Test head clearance*
DD	*Protective nozzle nominal inside diameter*
A	*Distance nozzle - material*

Selecting and fitting the protective nozzles

WARNING!
Do not slide the test material in or out without nozzles.
This involves the risk of major damages!
Never operate the system without protective nozzles installed!

Test material -Ø D	Auxiliary nozzle 6.452.01-5901	Entry nozzle robust 6.452.01-3212	Exit nozzle robust 6.452.01-3222
5.0 to Ø 7.9		DD = Test material -Ø + 0.5 mm	
8.0 to Ø 15		DD = Test material -Ø + 1.0 mm	
15.1 to Ø 25		DD = Test material -Ø + 1.5 mm	
25.1 to Ø 50		DD = Test material -Ø + 2.0 mm	

Tab. 4.3 Selecting *protective nozzle 5 to 50 mm,* application drawing line

NOTE!
The test heads have to be adjusted according to the nominal diameter DD of the nozzles over the whole diameter range.

Example:

Test piece Ø		Nominal Ø nozzle		Scale value
7 mm	➔	7.5	➔	7.5
12 mm	➔	13.0	➔	13.0
20 mm	➔	21.5	➔	21.5
30 mm	➔	32.0	➔	32.0
50 mm	➔	52.0	➔	52.0

Recommended settings

Test heads according the opposite table are set to the test piece nominal diameter with respect to the selected nozzle.

Test head	Track width Bs
6.452.03-2321	2 x 5 mm

While considering this setup recommendations a sufficient probe protection (**A_{PK} - A**) of minimum 0.2 mm is given.

Nozzle diameter DD [mm]	Scale
5 up to 16.9	DD – 1,4
≥ 16.9 up to 52	DD – 2,6

With worse testing conditions, e.g. drawing line with bented ends or reduced guidance quality, a higher probe protection is given with that scale setting:

Nozzle diameter DD [mm]	Scale
5 up to 52	DD

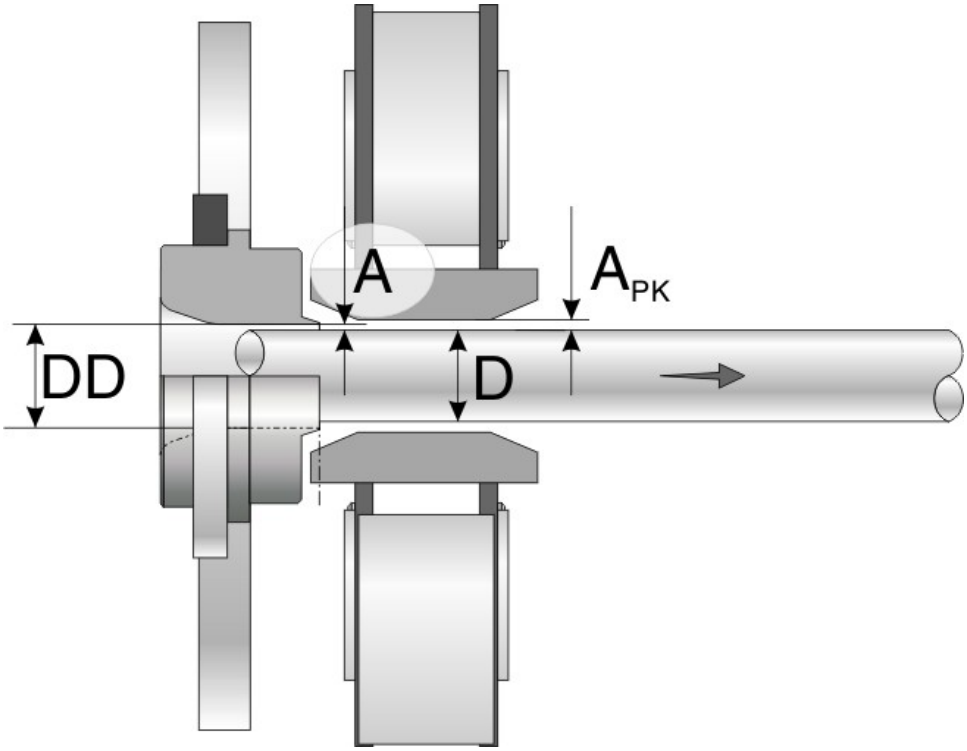

Fig. 4.11 Definition of the settings on the test head

Notes:

5 MAINTENANCE

5.1 Maintenance schedule

WARNING!
Risk of injury!
Always switch off the drive and wait for the machine to stop before performing work of any kind!
Do not touch or tamper with the sensor system, with the rotating unit operating!

Deceleration times:
without braking approx. 6 minutes
with braking approx. 30 seconds
(Values are valid for maximum rotational speed 6,000 rpm)

Important! **Parts which are worn or damaged must be replaced immediately.**				
	when changing dimensions	**each shift**	**each week**	**each month**
Roller guide		clean, check track rollers for wear and damage	oil joints, oil spindle, oil hinges	
Nozzles	Remove, check thoroughly and visually for damage	clean, clean for wear and damage		
Rotating parts		clean	clean, check for wear and damage	
Testing heads	clean, check for wear and damage	clean, check for wear and damage		
V-ribbed belt				check tension check for wear and damage

Tab. 5.1 Maintenance schedule

5.2 Cleaning

WARNING!
Do not use solvent cleaner, petrol or alcohol!
Use commercially available cleaning agents. Observe the instructions for use from the respective cleaning agent manufacturer.

- Make sure the areas around the rotating parts are clean!
  Remove abrasion and dirt with an industrial vacuum cleaner.
- Clean rotating disc and test heads.
- Clean test piece sensor (external) with a soft cloth.
- Lightly oil bright metallic parts after cleaning.
- For cleaning the inner chamber loosen three Allen screws M 6 x 12 DIN 912 and remove cover.
- Do not blow compressed air into open chamber!

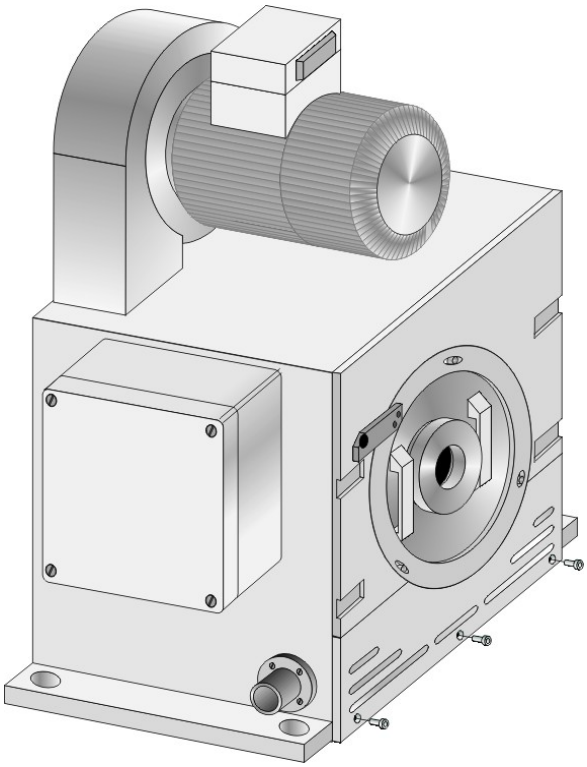

Fig.5.1 Cleaning the inner chamber

5.3 Removing and fitting the test heads

NOTE!
Make sure the plug contacts are clean!

- Open housing flange.

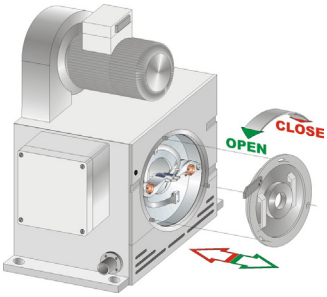

- Untighten three Allen screws M 6 x 10 DIN 912 (C).
- Turn and remove housing flange.

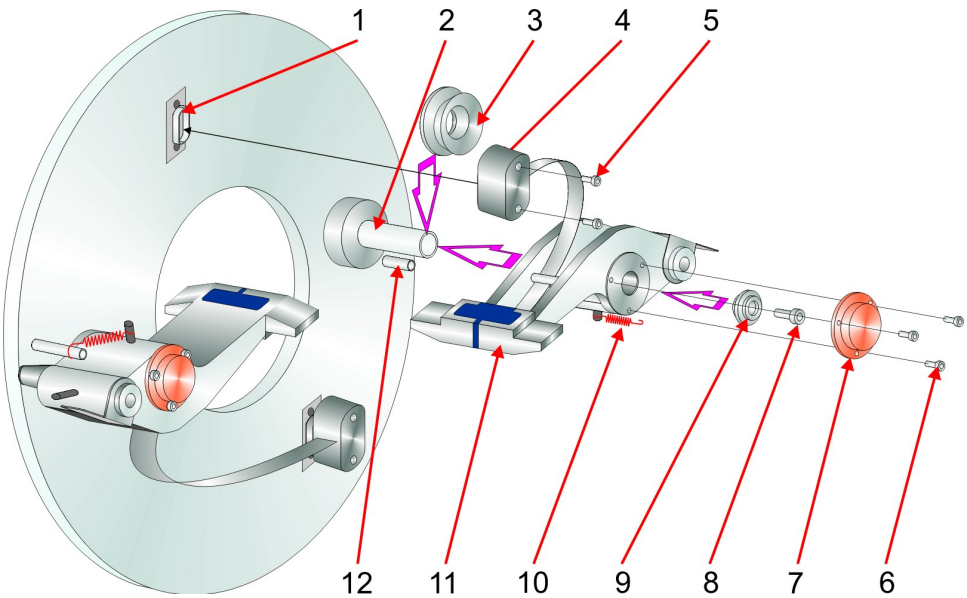

Fig. 5.2 Removing and fitting the test heads

- Loose the test head.

- Remove three Allen screws (6) M3 x 8 DIN 912.
- Remove cover (7).
- Remove Allen screw (8) M5 x 10 DIN 6912.
- Remove washer (9).

- Remove the test head.

- Untighten two Allen screws (5) M x 25 DIN 912.
- Pull off the plug (4).
- Unhook tension spring (10) from spring bolt (12) by loosening the nut.
- Take out the test head (11).

NOTE!
Use test heads as a set with the same specifications. The type number is found on the side of the test heads.

- Clean all parts, especially bolt (2), sealing ring (3), collared bushes (ref. to Fig. 5.6) and test head bearing bush.

Reassembling vice versa.

- Note the correct installation position:
  The stop on the test head must contact the control edge of the rotating disc.
- Do not kink or twist the ribbon cable.
- Check mobility of the test head.
- Engage the tension spring in the annular grove of the spring bolt, the test head is forced to position CLOSED during stand still of rotor.

NOTE!
In application drawing line the spring may bee hooked to the rear side bolt of the test head to open the test heads, if rotational speed decreases under the minimum speed.

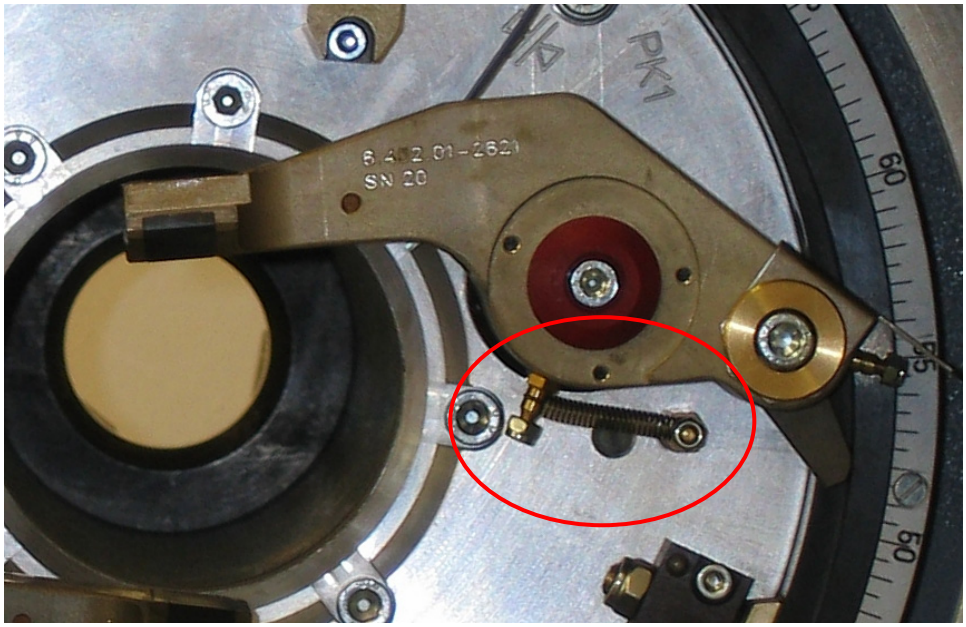

Fig. 5.3 Test heads fitted, lid (7) not assembled, spring in standard position

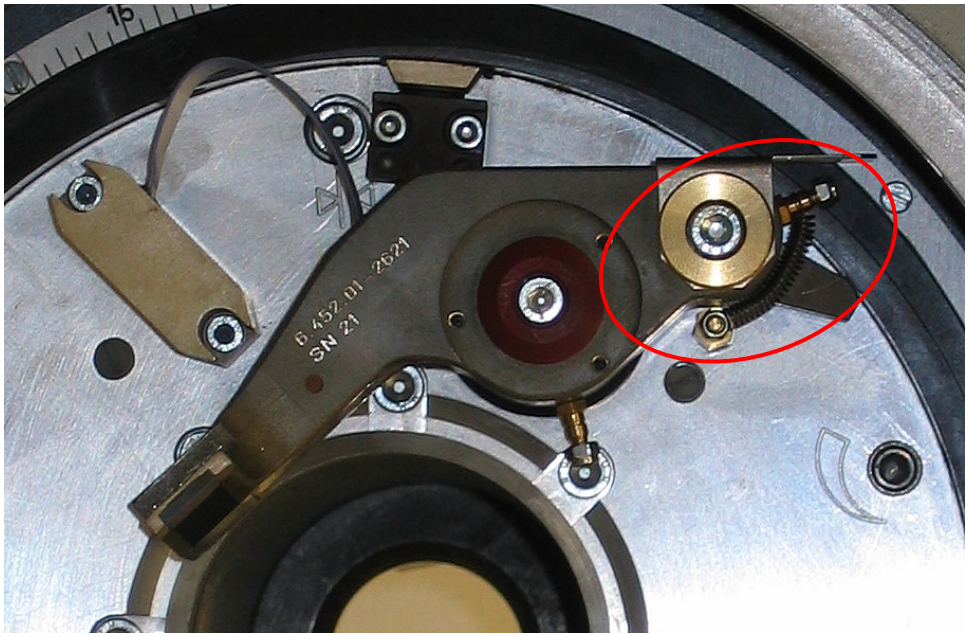

Fig. 5.4 Test heads fitted, lid (7) not assembled, spring in position “drawing line”

5.4 Replacing parts subject to wear

NOTE!
Test heads with worn slide-on or protective strips can be repaired properly only by the manufacturer!

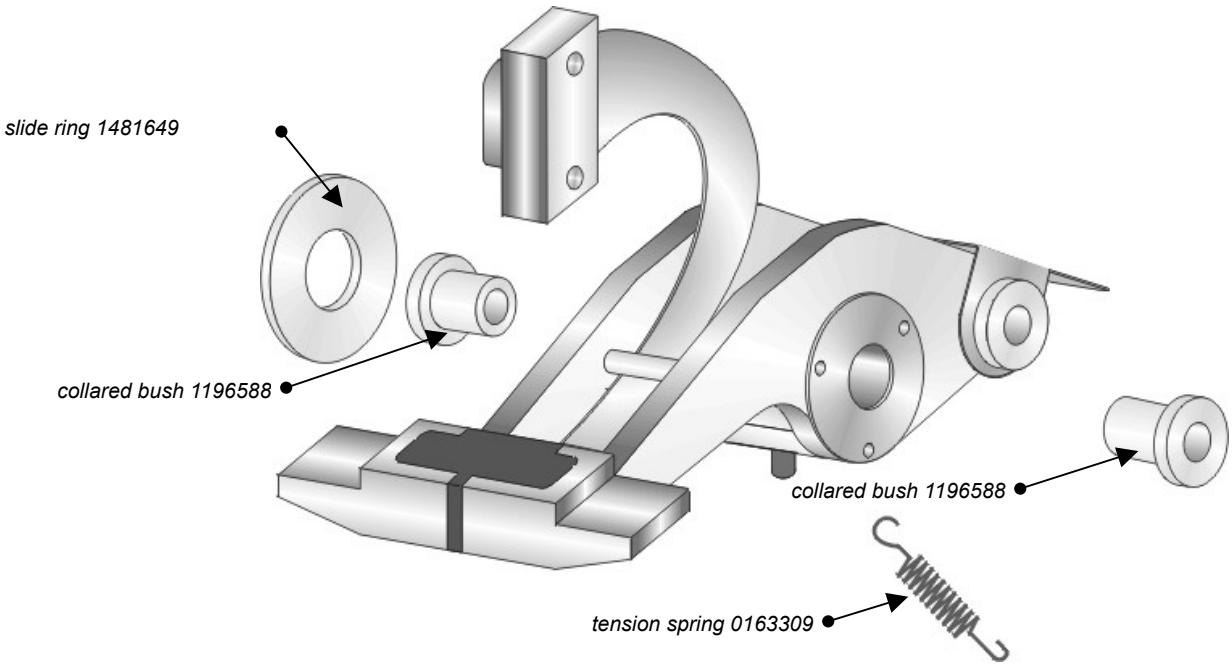

Fig. 5.6 Wear parts in the test heads

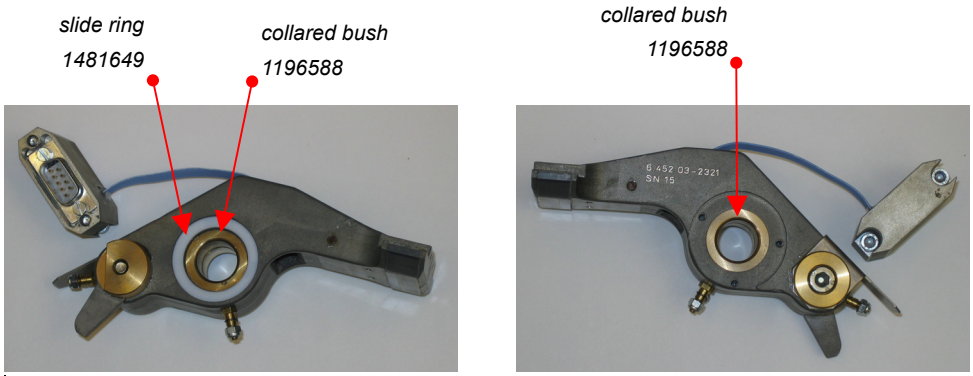

Fig. 5.5 Wear parts of the test head

5.5 Maintenance of the roller guides

5.5.1 Lubrication

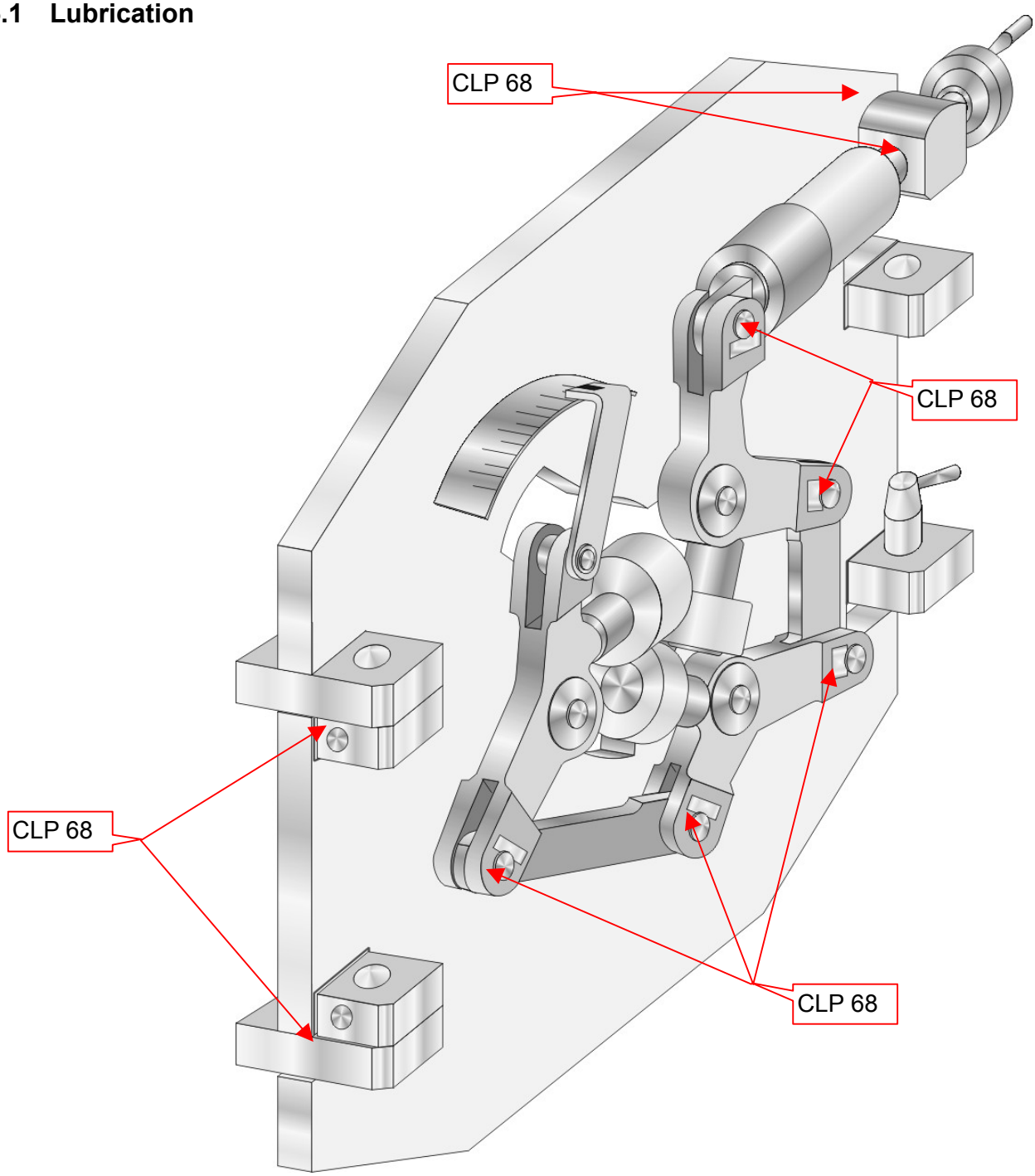

Fig. 5.7 Lubricating the roller guide

The lubrication points marked with CLP 68 must be lubricated 1 x weekly with lubricant oil of ISO viscosity class 68 (DIN 51519) or similar.

5.5.2 Replacing the track rollers

NOTES!
Track rollers may be changed with the roller leaver either fitted or removed. Always change all three rollers at the same time!

- When roller leaver (4) fitted, open the roller guides to the maximum diameter.
- Unscrew the Allen screw (1) M 6 x 40 DIN 912.
- Draw off track roller (3) with roller pin (2) inserted.
- Push roller pin (2)out of the track roller (3).
- Reassemble vice versa.

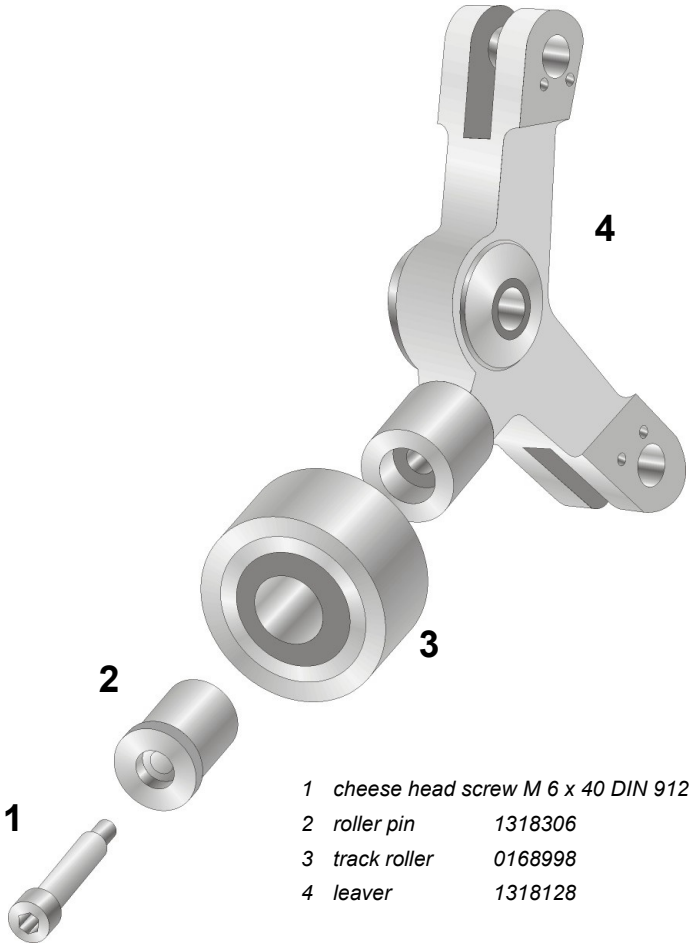

Fig. 5.8 Replacing the track rollers

5.5.3 Removing the roller guide levers

NOTE!
The levers of the roller guide should be removed for replacement of the track rollers or for thorough maintenance and care of the roller guide.

- Remove retaining plates (6).
- Pull out bolts (5) of leaver (4).
- Remove fishplates (11).
- Unscrew groove nut (8).
- Remove washer (9), shim washer (10) (if present), O-ring (2) and thrust washer (3).
- Pull leaver (4), thrust washer (3) and O-ring (2) off bearing pin (1).
- Reassemble vice versa.

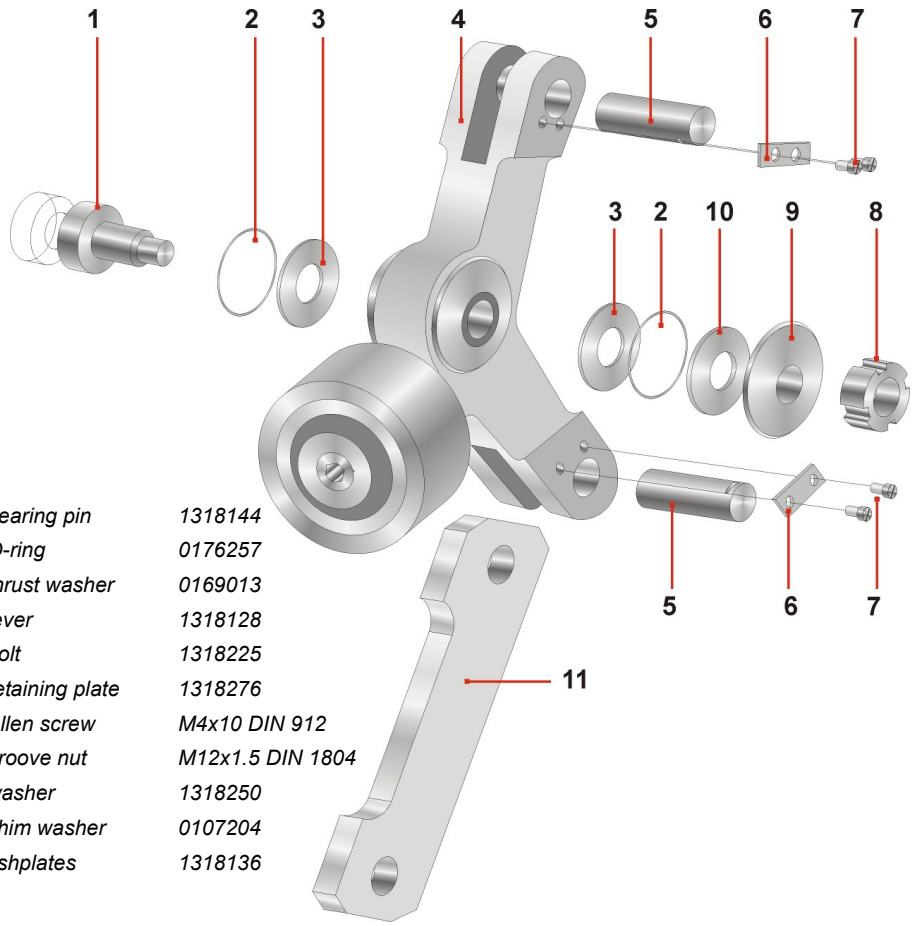

1	*bearing pin*	*1318144*
2	*O-ring*	*0176257*
3	*thrust washer*	*0169013*
4	*lever*	*1318128*
5	*bolt*	*1318225*
6	*retaining plate*	*1318276*
7	*Allen screw*	*M4x10 DIN 912*
8	*groove nut*	*M12x1.5 DIN 1804*
9	*washer*	*1318250*
10	*shim washer*	*0107204*
11	*fishplates*	*1318136*

Fig. 5.9 Removing the roller guide levers

5.6 Checking and changing the V-ribbed belt

Fig. 5.10 Checking the belt tension

- Set the belt's bowing under load so that it does not whistle or lisp during acceleration.

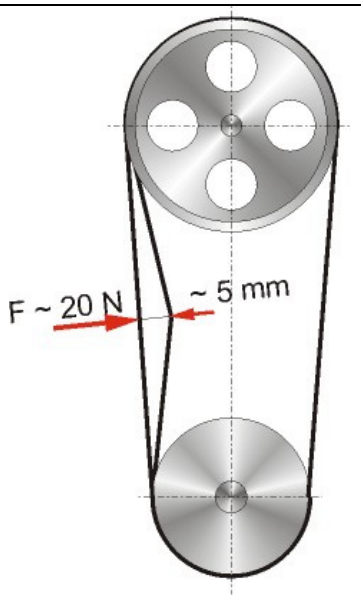

Fig. 5.11 Tensioning check with a spring balance

NOTE!
For exact tensioning check with a spring balance!

- Loosen the clamping screws M8 x 25 DIN 912 (accessible through the 4 holes in the belt pulley).

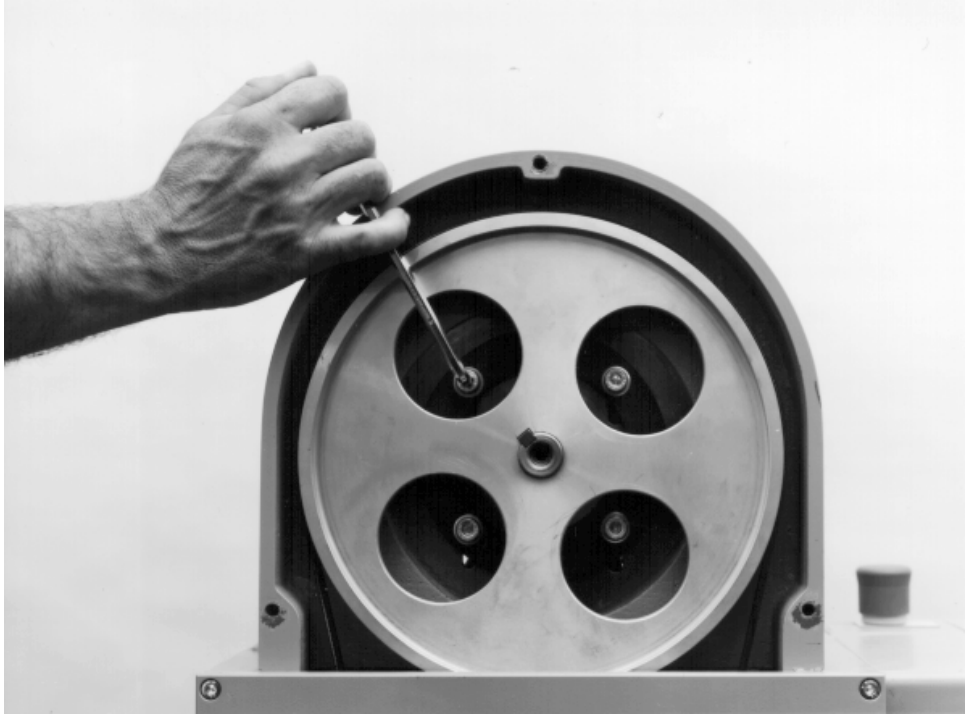

Fig. 5.12 Setting the belt tension, loosening the engine mount

- In order to tension the belt, adjust the hexagon screw M8 x 25 DIN 933 and lock with nut M8 DIN 934.

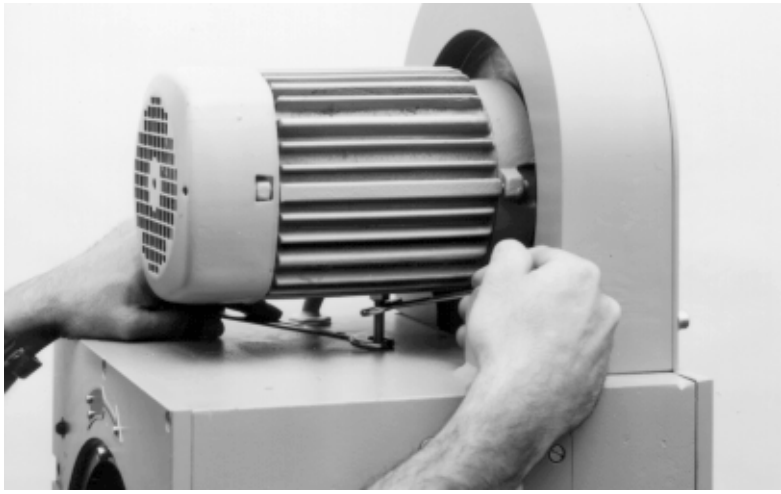

Fig. 5.13 Setting the belt tension, setscrew and locknut

Changing the V-ribbed belt

- Unscrew the three fastening screws M8 x 16 DIN 6912 of the belt cover and remove the belt cover.
- Loosen the clamping screws M8 x 25 DIN 912 (ref. to Fig. 5.12).
- Loosen the hexagon screw M8 x 25 DIN 933 and lock M8 DIN 934 (ref. to Fig. 5.13), lower the motor.
- Unscrew eight Allen screws M 6x12 DIN 912.

WARNING!
Mass of the face plate approx. 11 kg!

- Remove face plate.
- Change the V-ribbed belt.

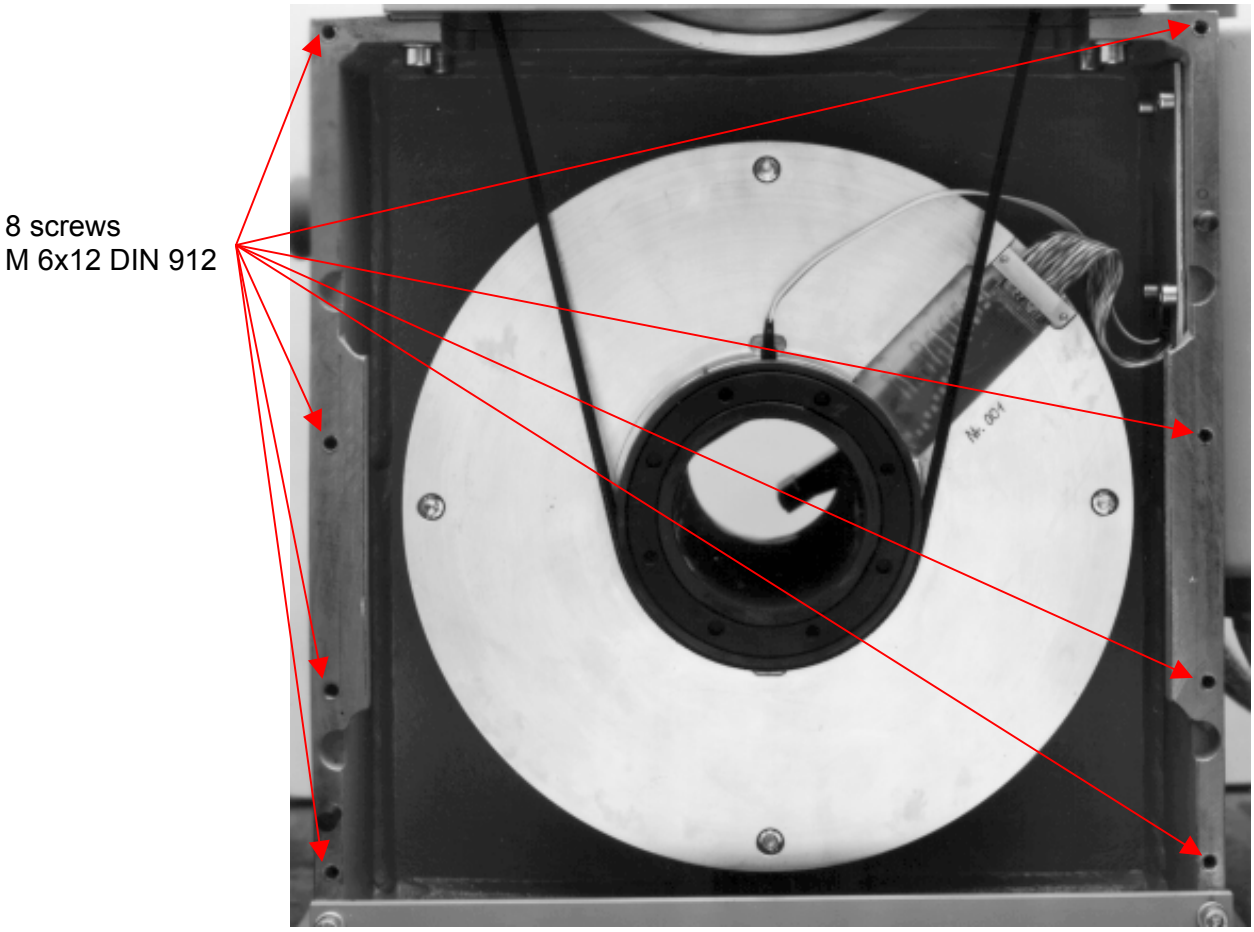

Fig.5.14 Change of the belt, face plate removed

NOTE!
Before the exit-side face plate is screwed on, the special washers fitted on the screws must be checked for damage (earth fault). They must be replaced by new ones if necessary.

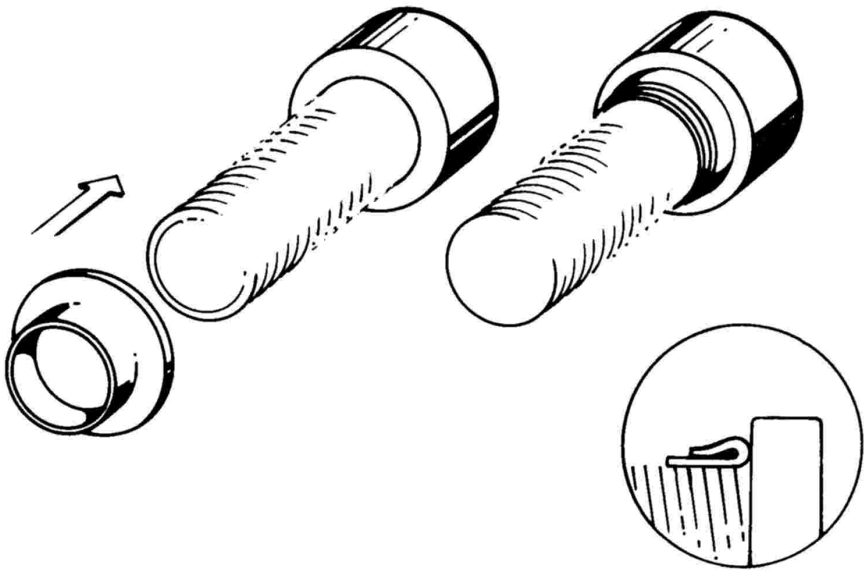

Fig.5.15 Special washer
left: after tightening right:: initial condition

- Put on faceplate, tighten eight Allen screws M 6x16 DIN 912 with **max. torque of 4 Nm**.
- Tension the belt according to Chap. 5.6.
- Mount the belt cover with the three fastening screws M8 x 16 DIN 6912.

5.7 List of parts subject to wear

Name	Part-No. Order-No.		Quantity fitted in the sensors system	Recommended minimum quantity on stock
Rotating head	6.452.01-1301			
V-ribbed belt	0160750 Poly-V 490; J4 F. Reiff		1	1
V-seal	0164305		2	4
Sealing ring Nyltite-Siegel M6	0179272		8	25
Test head, alternatively:				
Test head, track width 2 x 2.5	1447017 6.452.01-2311	1811096 6.452.03-2311	2	4
Test head, track width 2 x 5	1447025 6.452.01-2321	1664514 6.452.03-2321	2	4
Test head track width 2 x 10	1447033 6.452.01-2331	1664522 6.452.03-2331	2	4
Tension spring	0163309 Fa. Gutekunst		2	4
Collared bush	1196588		4	8
Slide ring	1481649		2	4
Roller guide	1290827 6.451.01-5001		(optional 2)	
Track roller	0168998 LR 5204 KD Fa.INA		6	12
O-ring	0176257 Simirit 72 NBR – 872, GA. Freudenberg		12	24
O-ring	0111074 Simirit 72 NBR – 872, GA. Freudenberg		12	42
O-ring	0089788 Simirit 72 NBR – 872, GA. Freudenberg		2	4
Nozzle, alternatively:	nominal diameter to be mentioned on ordering			
Entry nozzle	6.452.01-3211		1	1
Exit nozzle	6.452.01-3221		1	1
Entry nozzle robust	6.452.01-3212		1	1
Exit nozzle robust	6.452.01-3222		1	1

INSTITUT DR. FOERSTER GmbH & Co. KG
Division TS Semi-finished Product Testing
In Laisen 70
72766 REUTLINGEN
GERMANY

Telephone: +49 7121 140-270
Fax: +49 7121 140-459
E-mail: ts@foerstergroup.de
Internet: www.foerstergroup.de

6.452 UA06/EN
Order no.: 182 689 1

Edition: 04/2011
Author: Haditsch